siniat

Shaping the way people build

NIDA System

Fire-resistant plasterboard systems

- Partitions
- Linings
- Ceilings

TABLE OF CONTENTS

Introduction

Partitions

Linings

Ceilings

Plasterboard manufacturing process

- Plaster is obtained through the dehydration of gypsum (gypsum rock) which contains 20% water.
  This water is part of the chemical composition of gypsum ($CaSO_4$, 2 H_2O).
  In order to obtain plaster ($CaSO_4$, 1/2 H_2O) most of the water must be extracted by burning in a kiln (calcination).

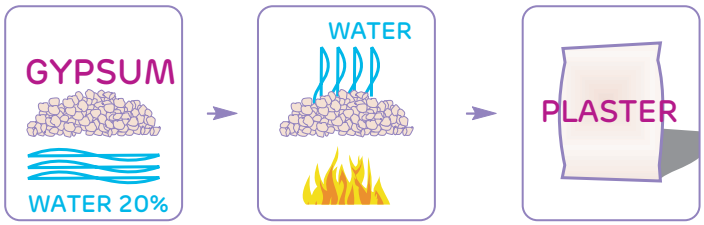

- When plaster is mixed in the preparation vessel, in the rendering machine or in the plasterboard plant, water is added to cover the hydration needs and the excess amount needed for bonding, molding or plastering operations. The excess of water evaporates after drying, and the gypsum returns to its initial water content, which is 20%.

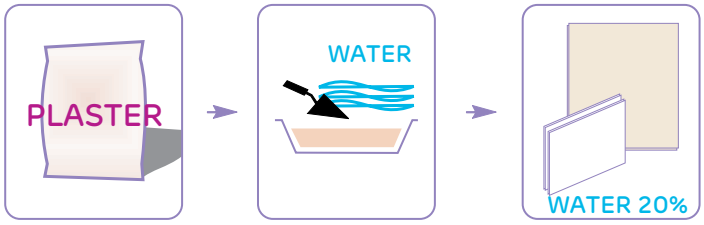

- In case of fire, the flames attack the gypsum works, dehydrating them gradually, as it happens in the gypsum kiln. As long as the water is not fully extracted, the gypsum protects the flammable insulation elements, the building structures and the other spaces, maintaining a temperature of 100° C behind them, corresponding to water evaporation; the energy required for this transformation is absorbed from the fire, thus retarding its expansion.

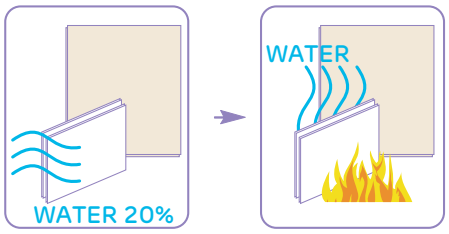

- On the other hand, the gypsum (either in the form of plaster, render or plasterboard) allows:
  - the architect to enjoy full freedom of shape and volume, and any decorative effects
  - the constructor to easily apply the products, according to perfectly mastered techniques
  - the inhabitant not to encounter any issues, despite the performance requirements in case of fire
  - the manager to be sure about the durability and easy maintenance and protection

Gypsum is a natural, recyclable and environmental friendly material.

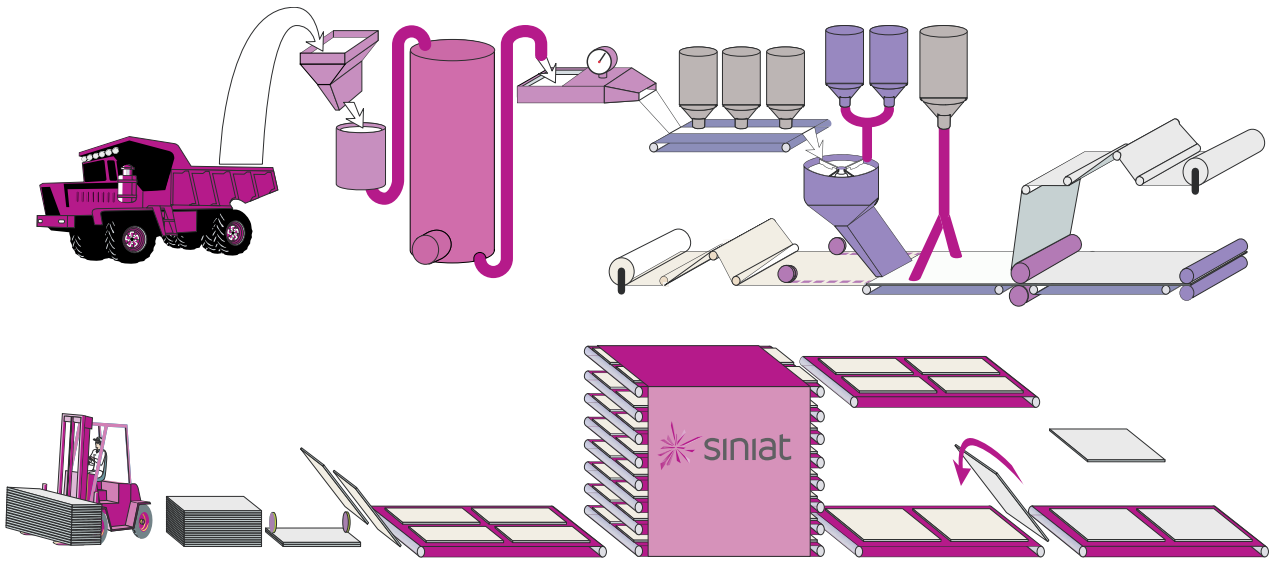

LEGAL FRAMEWORK

"Constructions and construction elements must be generally designed and built so as not to favor the appearance and spreading of fires" (P 118-99).

The fire safety requirements for buildings should meet the criteria and performance levels provided in the norm; the necessary equipment and fire alarm and estinguishing systems are specifically designed for each project.

In order to achieve the required performance levels and criteria, the materials, construction elements and installations are subject to functional and fire behavior determinations (flammability class, fire resistance, flame propagation etc.).

Fire protection is also a QUALITY REQUIREMENT in constructions, in accordance with Law no. 10 / 1995.

TERMINOLOGY

The symbols and the measurement units of quantities used are consistent with the definitions in the "STANDARD ON THE FIRE SAFETY OF BUILDINGS- INDICATIVE P 118-99".

- **Fire**
  - complex burning process, with uncontrolled evolution, due to the presence of flammable substances and ignition sources, whose appearance and outcome have negative effects in terms of casualties material damages, etc.

- **Fire behaviour**
  - all physical and chemical changes that occur when a material, product or assembly is subject to the action of a standard fire.

- **Fire resistance class**
  - the global capacity of the construction or fire partition to respond to the action of a standard fire, regardless of its destination or function.

- **Flammability of materials (construction elements)**
  - their capacity to ignite and continue to burn, contributing to the amount of heat generated by the fire.

REACTION TO FIRE: CLASSIFICATION OF MATERIALS

Reaction to fire means: "Behaviour of a material that, by its own decomposition, fuels the fire it is exposed to, under specified conditions."

Reaction to fire refers to the individual behaviour of a board or element of the system. For NIDA plasterboards, the reaction to fire class is A2-s1,d0.

Reaction to fire class according to EN13501-1[4]	
A1[1]	-
A2	s1[2], d0[3]
A2	s1, d1
	s2, d0
	s2, d1
	s3, d0
	s3, d1
B	s1, d0
	s1, d1
	s2, d0
	s2, d1
	s3, d0
	s3, d1

Reaction to fire class according to EN13501-1	
C	s1, d0
	s1, d1
	s2, d0
	s2, d1
	s3, d0
	s3, d1
D	s1, d0
	s1, d1
	s2, d0
	s2, d1
	s3, d0
	s3, d1

Reaction to fire class according to EN13501-1	
A2	s1, d2
	s2, d2
	s3, d2
B	s1, d2
	s2, d2
	s3, d2
C	s1, d2
	s2, d2
	s3, d2

Reaction to fire class according to EN13501-1	
D	s1, d2
	s2, d2
	s3, d2
E	d2
F	-

Note:

1. - A1...F - classes for the reaction to fire performance
2. - s1, s2, s3 - additional classification regarding the emission of smoke - EF
3. - d0, d1, d2 - additional classification for burning droplets or particles - PPA
4. - (SR)EN 13501-1 - classification of construction materials by the reaction to fire - Part I: Classification by the reaction to fire test results

EXAMPLES OF CLASSIFICATION BY THE REACTION TO FIRE OF SOME TYPES OF MATERIALS

Non-combustible materials	A1	Increasing flammability ↓	PREGYFEU A1 (M0)
Hardly combustible materials	A2		NIDA Hydro, NIDA Standard, NIDA Flam, AquaBoard, NIDA Acustic
Combustible materials	B		other materials
	C		fireproof wood
	D		wood over 18 mm
	E		thin wood

RESISTANCE TO FIRE: SYSTEMS PERFORMANCE

Resistance to fire: "Capacity of a product to maintain, for a determined period of time, the imposed fire resistance, fire proof, thermal insulation and/or any other imposed function, specified in a standardized test of resistance to fire."
Resistance to fire refers to the reaction of a system and takes into account all its components (boards, profiles, accessories, assembly).

When a building is on fire, the following should be avoided:

- the collapse of the structural elements of the building (structures fire stability R)
- fire propagation to other locations (fire proofing E and Thermal insulation I).

R
Mechanical resistance

E
Fire and hot gas proof

I
Thermal insulation

The plasterboard systems are not structural elements, therefore, they are not included in "E" and "I" classes.
They reach maximum fire resistance performances of up to 180 minutes.

Resistance to fire classification

according to SR EN 13501-2+A1:2010*

EI	15	20	30	45	60	90	120	180	240	360

The resistance to fire of NIDA systems, according to tightness and thermal insulation criteria, is between 30 and 180 minutes, depending on the structure.

The modified configuration of the systems increase or decrease the mechanical resistance and stability perfomance data. The performance of a system (e.g. maximum height, rigidity) can be improved if the following is considered:

- Decreased interaxis between metal profiles;
- Double metal structure;
- The use of profiles with higher width and/or thickness from NIDAmetal range;
- The additional lining with plasterboard;

The first 3 aspects can also reduce the acoustic performance of the systems. .

Note:

***SR EN 13501-2+A1:2010**, "*Fire classification of construction products and elements. Part 2: Clasisification using the results of the fire resistance tests, excepts for products used in ventilation systems.*"

****According to SR EN 13501-2+A1:2010** there is no classification for EI 150. According to P118, in some cases, EI 150 is required. In this case, only EI 180 can be included.

MINISTERUL DEZVOLTĂRII REGIONALE ŞI ADMINISTRATIEI PUBLICE
CONSILIUL TEHNIC PERMANENT PENTRU CONSTRUCŢII

Agrement Tehnic
017-03/150-2015

PROCEDEU DE REALIZARE A PERETILOR DIN GIPS CARTON REZISTENTI LA FOC NIDA SYSTEM
FIRE RESISTANT WALLS OF TYPE NIDA SYSTEM
MURS COUPE FEU TYPE NIDA SYSTEM
BRANDSCHUTZWAND TYP NIDA SYSTEM

PRODUCĂTOR: *SC SINIAT SA*
Str. Drumul Leordeni nr. 106, sector 4, Bucuresti
Tel. : 021.3075324, Fax: 021.3075373

TITULAR AGREMENT TEHNIC: *SC SINIAT SA*
Str. Drumul Leordeni nr. 106, sector 4, Bucuresti
Tel. : 021.3075324, Fax: 021.3075373

ELABORATOR AGREMENT TEHNIC: *INSTITUTUL EUROPEAN PENTRU ŞTIINŢE TERMICE*
Bd. Pache Protopopescu nr. 66, Sector 2
Bucureşti – ROMANIA

Grupa specializată nr. 3: *Protecţii la foc – termotehnică – acustică – protecţii hidrofuge şi învelitori*

Prezentul agrement tehnic este valabil până la data de 31.01.2018 numai însoţit de AVIZUL TEHNIC al Consiliului Tehnic Permanent pentru Construcţii şi nu ţine loc de certificat de calitate

Partitions

EI30 Partition

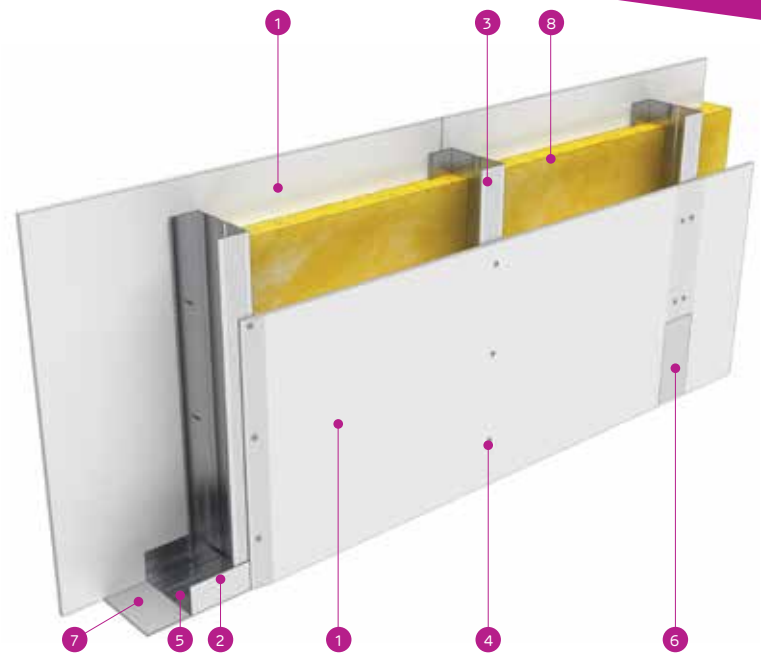

1. NIDA Standard 12,5 plasterboard
2. NIDA Metal UW profile
3. NIDA Metal CW profile
4. Self-tapping screw AF 212
5. Mechanical fixing (e.g. METAL DOWEL)*
6. Jointing tape and jointing compound NIDA Profesional
7. Mono adhesive insulating tape NIDA System
8. Mineral wool (optional)

SYSTEM PRESENTATION

- Metal structure: NIDA Metal UW&CW 50-75-100, thickness 0,60mm
- Type and number of plasterboards: 2x1 NIDA Standard 12,5
- Mineral wool: optional, only for acoustical considerations
- Weight: ≈20 kg/m²

PERFORMANCES

SYSTEM TYPE	SYSTEM THICKNESS [mm]	PROFILE TYPE NIDA Metal UW, CW (thickness 0.6mm)	INTERAXIS CW STUD [cm]	NIDA PLASTERBOARDS NUMBER AND THICKNESS	ACOUSTIC INSULATION INDEX R_w [dB]	
					Without mineral wool	With mineral wool
D	75	50	30/40/60	2x1 NIDA Standard 12,5mm	35	42
	100	75	30/40/60	2x1 NIDA Standard 12,5mm	36	45
	125	100	30/40/60	2x1 NIDA Standard 12,5mm	37	46

Average quantities for 1 m² of system 3 m high and 5 m long

The loss coefficient is not included in the table. This shall be determined by the constructor depending on the specificity of the project.

PRODUCTS	UM	QUANTITIES					
		SIMPLE STUD			DOUBLE STUD		
		ϒ = 60 cm	**ϒ = 40 cm**	**ϒ = 30 cm**	**ϒ = 60 cm**	**ϒ = 40 cm**	**ϒ = 30 cm**
NIDA Standard 12,5 Plasterboard	m²	2,00	2,00	2,00	2,00	2,00	2,00
NIDA Metal UW profile	m	0,70	0,70	0,70	0,70	0,70	0,70
NIDA Metal CW profile	m	2,00	2,80	4,00	3,60	5,20	7,20
AF 212x25 self-tapping screw	pcs.	30,00	45,00	60,00	30,00	45,00	60,00
AP 421x9,5 self-drilling screw	pcs.	4,00	6,00	7,00	8,00	11,00	14,00
Mechanical fixing (e.g. METAL DOWEL)*	pcs.	1,50	1,50	1,50	1,50	1,50	1,50
NIDA Profesional jointing compound	kg	0,25	0,25	0,25	0,25	0,25	0,25
Joint tape**	m	3,50	3,50	3,50	3,50	3,50	3,50
NIDA Boardfix***	kg	0,10	0,10	0,10	0,10	0,10	0,10
Mono adhesive insulating tape	ml	0,80	0,80	0,80	0,80	0,80	0,80
Mineral wool clip (optional)	pcs.	1,00	1,00	1,00	1,00	1,00	1,00
Mineral wool (optional)	m²	1,00	1,00	1,00	1,00	1,00	1,00

*Mechanical fixing shall be selected by the specialized designer of the works, depending on the type of support (concrete, reinforced concrete, screeds, metal structures, wood...), maximum effective forces calculated in accordance with the law in force, the load bearing capacities of the selected fixing elements, as well as the mounting possibilities. In case of fire resistant systems, only steel connections shall be used

**For fire resistant systems, glass wool is mandatory;

***For bonding sills on masonry, repairs and filling joints <5 mm.

INSTALLATION

VERTICAL LAYOUT

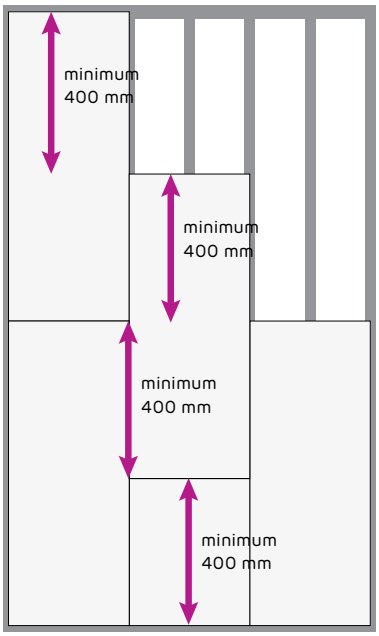

Vertical layout

* Horizontal joints should be staggered by at least 400 mm to avoid formation of continous cross-joints

BOARD FIXING: STAGGERING OF JOINTS ON OPPOSITE SIDES, RELATED TO THE STUD

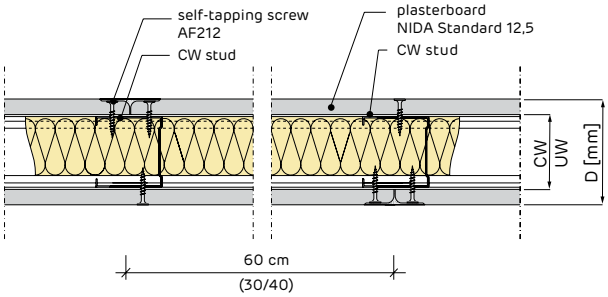

RIGID ASSEMBLY WITH CONCRETE WALL

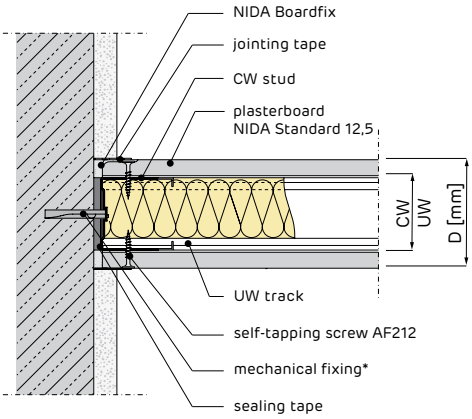

ASSEMBLY UNDER CONCRETE FLOOR, THROUGH INTERRUPTED PLASTERBOARD CEILING

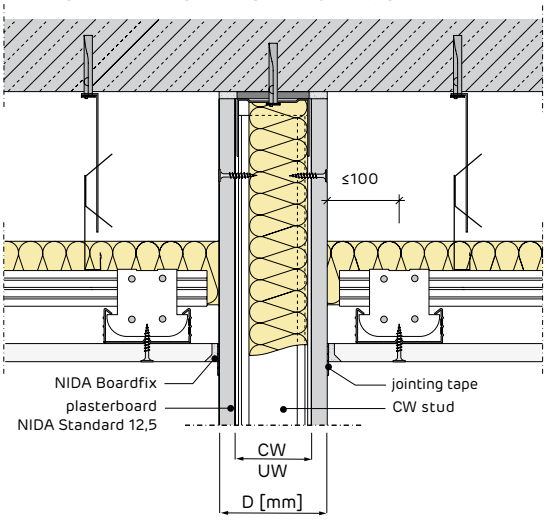

SLIDING ASSEMBLY UNDER CONCRETE FLOOR

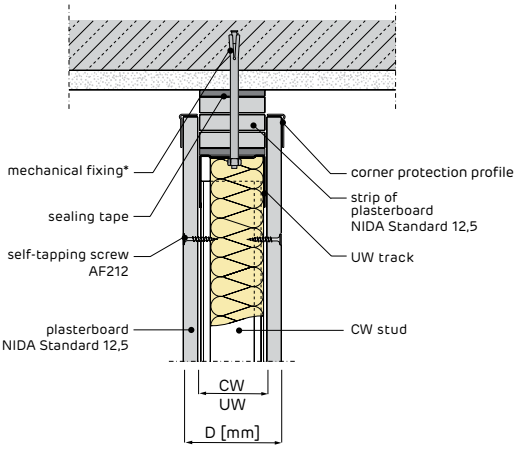

ASSEMBLY TO CONCRETE SLAB ON SCREED

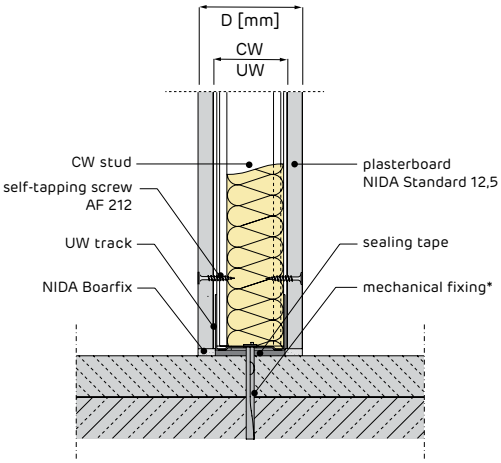

SLIDING ASSEMBLY - EXPANSION JOINT

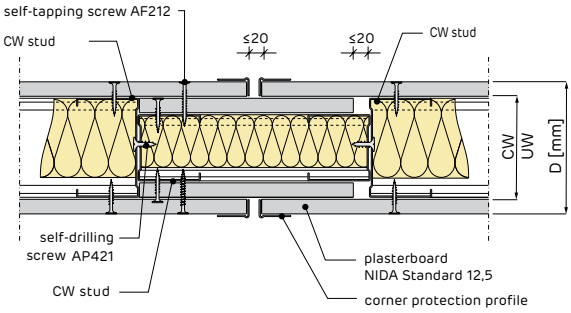

- If the wall is over 15m long, at maximum every 10m and at every expansion joint of the building, expansion joints shall be placed

Partition EI45

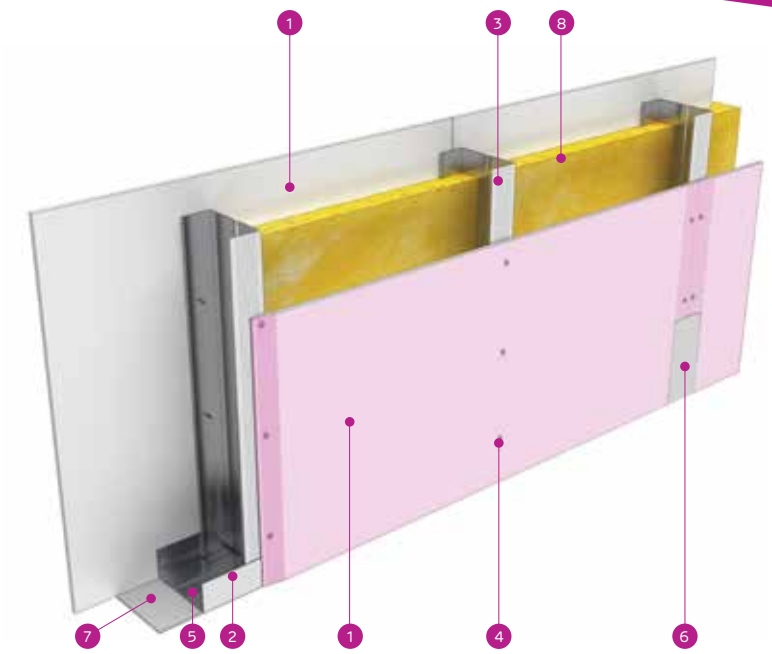

1. NIDA Flam 12,5 plasterboard
2. NIDA Metal UW profile
3. NIDA Metal CW profile
4. Self-tapping screw AF 212
5. Mechanical fixing (e.g. METAL DOWEL)*
6. Jointing tape and jointing compound NIDA Profesional
7. Mono adhesive insulating tape NIDA System
8. Mineral wool (optional)

SYSTEM PRESENTATION

- Metal structure: NIDA Metal UW&CW 50-75-100, thickness 0,60mm
- Type and number of plasterboards: 2x1 NIDA Flam 12,5
- Mineral wool: optional, only for acoustical considerations
- Weight: ≈25 kg/m²

PERFORMANCES

SYSTEM TYPE	SYSTEM THICKNESS [mm]	PROFILE TYPE NIDA Metal UW, CW (thickness 0.6mm)	INTERAXIS CW STUD [cm]	NIDA PLASTERBOARDS NUMBER AND THICKNESS	ACOUSTIC INSULATION INDEX R_w [dB]	
					Without mineral wool	With mineral wool
D	75	50	30/40/60	2x1 NIDA Flam 12,5mm	35	42
	100	75	30/40/60	2x1 NIDA Flam 12,5mm	36	45
	125	100	30/40/60	2x1 NIDA Flam 12,5mm	37	46

Average quantities for 1 m² of system 3 m high and 5 m long

The loss coefficient is not included in the table. This shall be determined by the constructor depending on the specificity of the project.

PRODUCTS	UM	QUANTITIES					
		SIMPLE STUD			DOUBLE STUD		
		ϒ = 60 cm	**ϒ = 40 cm**	**ϒ = 30 cm**	**ϒ = 60 cm**	**ϒ = 40 cm**	**ϒ = 30 cm**
NIDA Flam 12,5 plasterboard	m²	2,00	2,00	2,00	2,00	2,00	2,00
NIDA Metal UW profile	m	0,70	0,70	0,70	0,70	0,70	0,70
NIDA Metal CW profile	m	2,00	2,80	4,00	3,60	5,20	7,20
Self-tapping screw AF 212x25	pcs.	30,00	45,00	60,00	30,00	45,00	60,00
Self-drilling screw AP 421x9,5	pcs.	4,00	6,00	7,00	8,00	11,00	14,00
Mechanical fixing (e.g. METAL DOWEL)*	pcs.	1,50	1,50	1,50	1,50	1,50	1,50
NIDA Profesional jointing compound	kg	0,25	0,25	0,25	0,25	0,25	0,25
Joint tape**	m	3,50	3,50	3,50	3,50	3,50	3,50
NIDA Boardfix***	kg	0,10	0,10	0,10	0,10	0,10	0,10
Mono adhesive insulating tape	ml	0,80	0,80	0,80	0,80	0,80	0,80
Mineral wool clip (optional)	pcs.	1,00	1,00	1,00	1,00	1,00	1,00
Mineral wool (optional)	m²	1,00	1,00	1,00	1,00	1,00	1,00

*Mechanical fixing shall be selected by the specialized designer of the works, depending on the type of support (concrete, reinforced concrete, screeds, metal structures, wood...), maximum effective forces calculated in accordance with the law in force, the load bearing capacities of the selected fixing elements, as well as the mounting possibilities. In case of fire resistant systems, only steel connections shall be used

**For fire resistant systems, glass wool is mandatory;

***For bonding sills on masonry, repairs and filling joints <5 mm.

INSTALLATION

VERTICAL LAYOUT

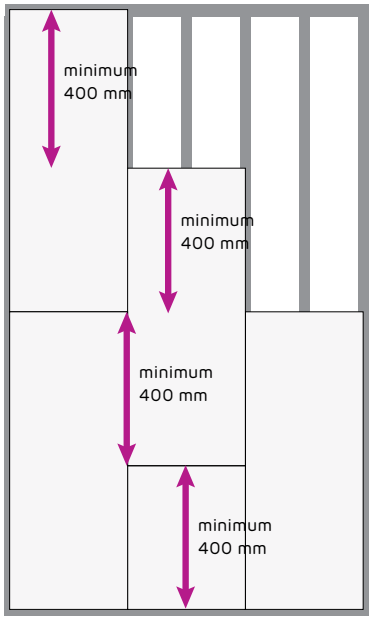

Vertical layout

*Horizontal joints of adjoining boards should be staggered by at least 400mm to avoid formation of continuous cross-joints.

BOARD FIXING: STAGGERING OF JOINTS ON OPPOSITE SIDES, RELATED TO THE STUD

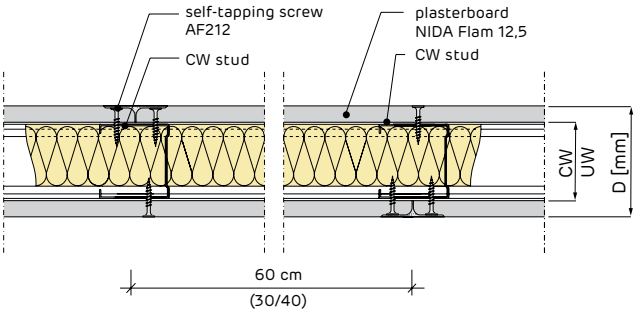

RIGID ASSEMBLY WITH CONCRETE WALL

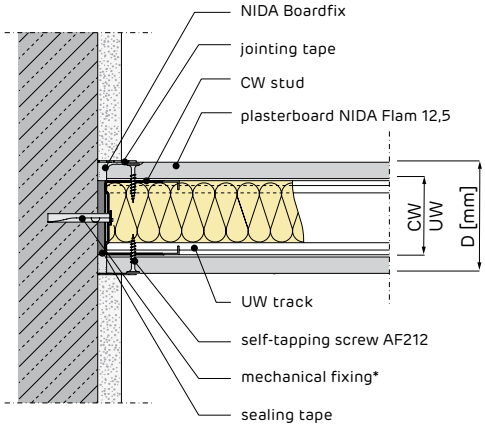

ASSEMBLY UNDER CONCRETE FLOOR, THROUGH INTERRUPTED PLASTERBOARD CEILING

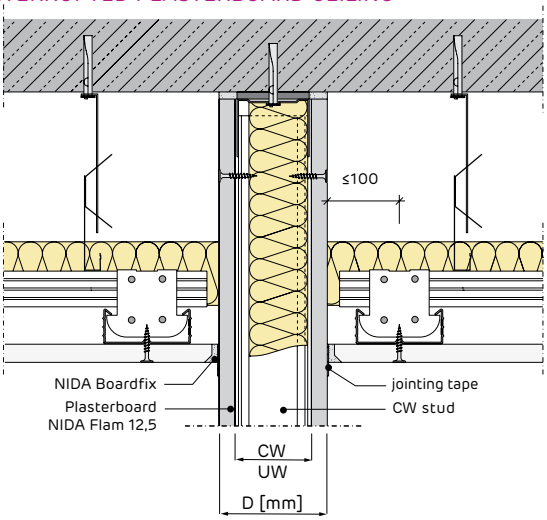

SLIDING ASSEMBLY UNDER CONCRETE FLOOR

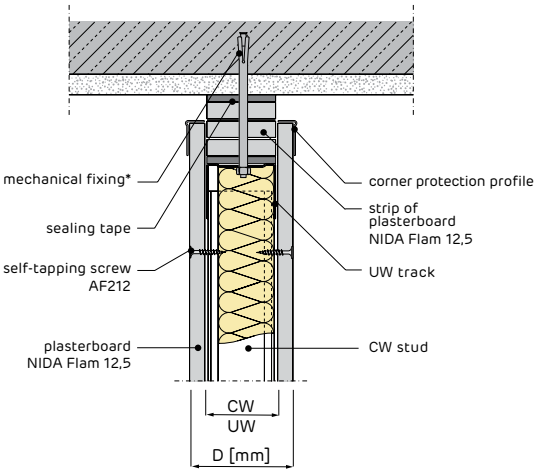

ASSEMBLY TO CONCRETE SLAB ON SCREED

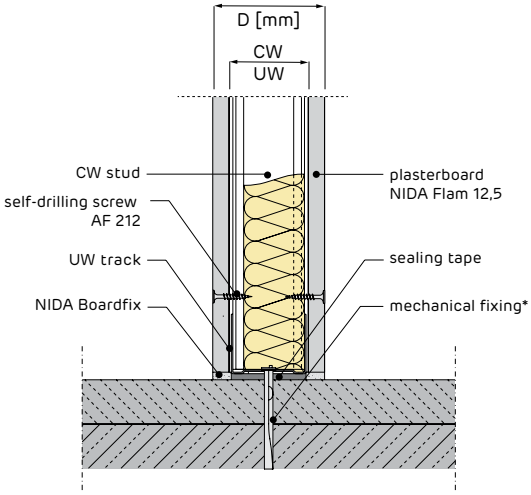

SLIDING ASSEMBLY - EXPANSION JOINT

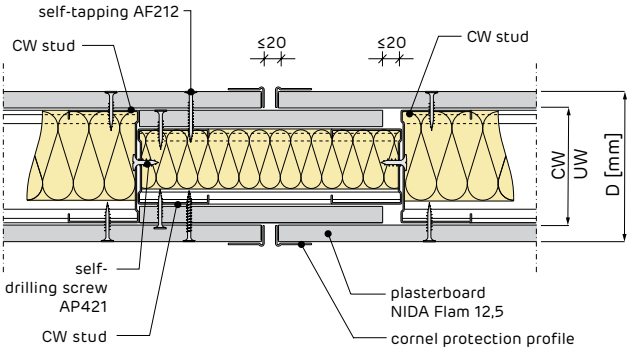

- If the wall is over 15m long, at maximum every 10m and at every expansion joint of the building, expansion joints shall be placed

Partition EI60 simple lining

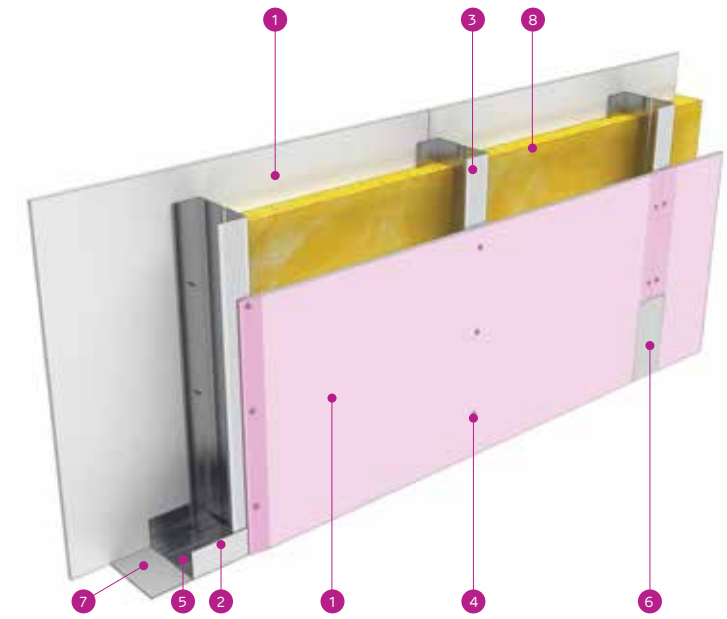

1. NIDA Flam 15 plasterboard
2. NIDA Metal UW profile
3. NIDA Metal CW profile
4. Self-tapping screw AF 212
5. Mechanical fixing (e.g. METAL DOWEL)*
6. Jointing tape and jointing compound NIDA Profesional
7. Mono adhesive insulating tape NIDA System
8. Mineral wool (optional)

SYSTEM PRESENTATION

- Metal structure: NIDA Metal UW&CW 50-75-100, thickness 0,60mm
- Type and number of plasterboards: 2x1 NIDA Flam 15
- Mineral wool: optional, only for acoustical considerations
- Weight: ≈35 kg/m²

PERFORMANCES

SYSTEM TYPE	SYSTEM THICKNESS [mm]	PROFILE TYPE NIDA Metal UW, CW (thickness 0.6mm)	INTERAXIS CW STUD [cm]	NIDA PLASTERBOARDS NUMBER AND THICKNESS	ACOUSTIC INSULATION INDEX R_w [dB]	
					Without mineral wool	With mineral wool
D	80	50	30/40/60	2x1 NIDA Flam 15 mm	36	43
	105	75	30/40/60	2x1 NIDA Flam 15 mm	37	46
	130	100	30/40/60	2x1 NIDA Flam 15 mm	39	47

Average quantities for 1 m² of system 3 m high and 5 m long

The loss coefficient is not included in the table. This shall be determined by the constructor depending on the specificity of the project.

PRODUCTS	UM	QUANTITIES					
		SIMPLE STUD			DOUBLE STUD		
		ϒ = 60 cm	ϒ = 40 cm	ϒ = 30 cm	ϒ = 60 cm	ϒ = 40 cm	ϒ = 30 cm
NIDA Flam 15 plasterboard	m²	2,00	2,00	2,00	2,00	2,00	2,00
NIDA Metal UW profile	m	0,70	0,70	0,70	0,70	0,70	0,70
NIDA Metal CW profile	m	2,00	2,80	4,00	3,60	5,20	7,20
Self-tapping screw AF 212x35	pcs.	30,00	45,00	60,00	30,00	45,00	60,00
AP 421x9,5 self-drilling screw	pcs.	4,00	6,00	7,00	8,00	11,00	14,00
Mechanical fixing (e.g. METAL DOWEL)*	pcs.	1,50	1,50	1,50	1,50	1,50	1,50
NIDA Profesional jointing compound	kg	0,25	0,25	0,25	0,25	0,25	0,25
Joint tape**	m	3,50	3,50	3,50	3,50	3,50	3,50
NIDA Boardfix***	kg	0,10	0,10	0,10	0,10	0,10	0,10
Mono adhesive insulating tape	ml	0,80	0,80	0,80	0,80	0,80	0,80
Mineral wool clip (optional)	pcs.	1,00	1,00	1,00	1,00	1,00	1,00
Mineral wool (optional)	m²	1,00	1,00	1,00	1,00	1,00	1,00

*Mechanical fixing shall be selected by the specialized designer of the works, depending on the type of support (concrete, reinforced concrete, screeds, metal structures, wood...), maximum effective forces calculated in accordance with the law in force, the load bearing capacities of the selected fixing elements, as well as the mounting possibilities. In case of fire resistant systems, only steel connections shall be used

**For fire resistant systems, glass wool is mandatory;

***For bonding sills on masonry, repairs and filling joints <5 mm.

INSTALLATION

VERTICAL LAYOUT

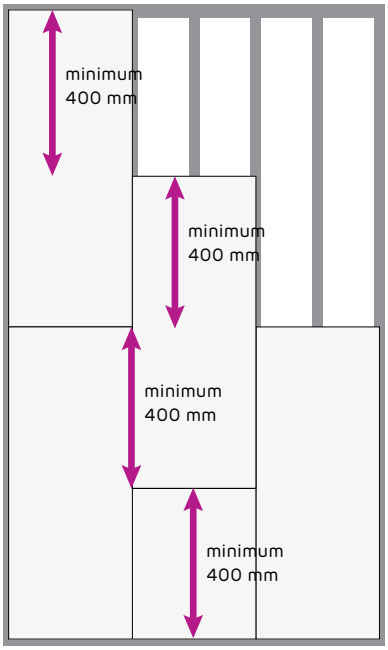

Vertical layout

*Horizontal joints of adjoining boards should be staggered by at least 400mm to avoid formation of continuous cross-joints.

BOARD FIXING: STAGGERING OF JOINTS ON OPPOSITE SIDES, RELATED TO THE STUD

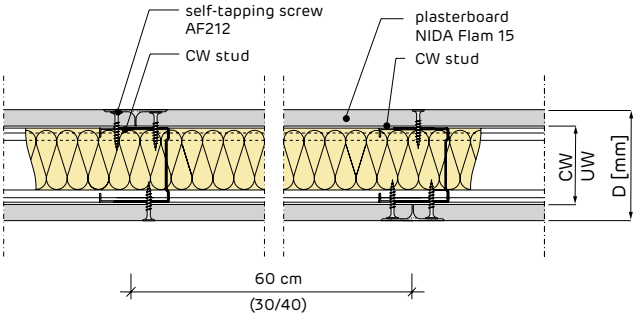

RIGID ASSEMBLY WITH CONCRETE WALL

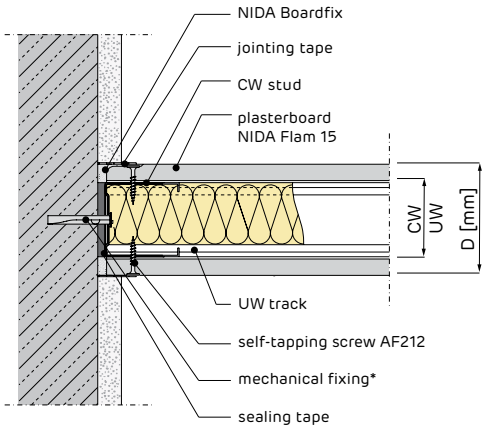

ASSEMBLY UNDER CONCRETE FLOOR, THROUGH INTERRUPTED PLASTERBOARD CEILING

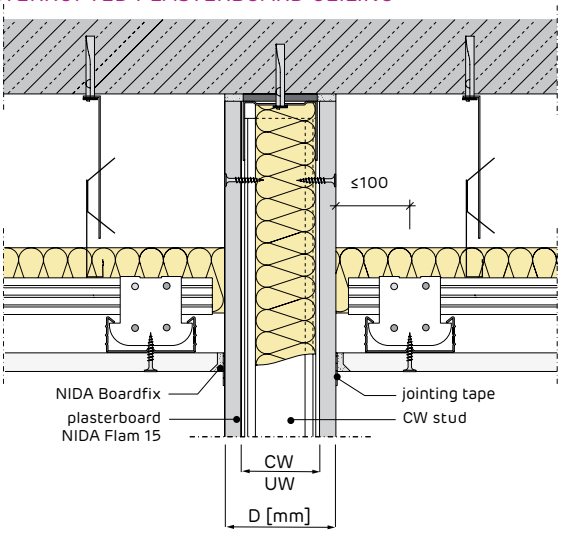

SLIDING ASSEMBLY UNDER CONCRETE FLOOR

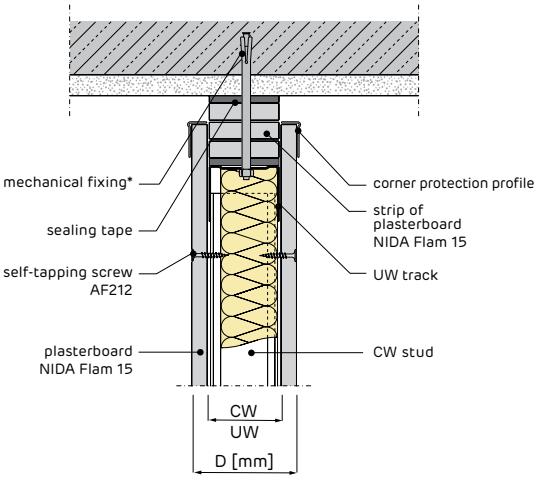

ASSEMBLY TO CONCRETE SLAB ON SCREED

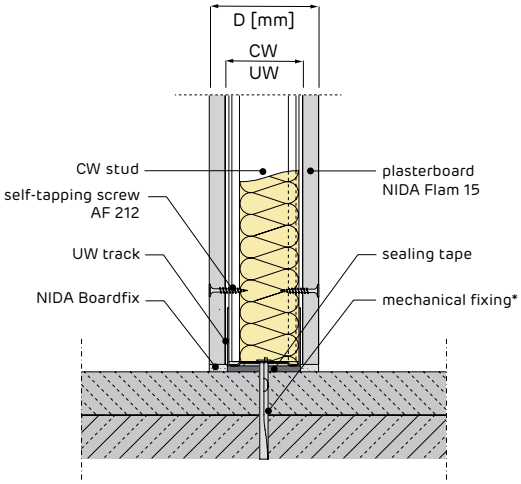

SLIDING ASSEMBLY - EXPANSION JOINT

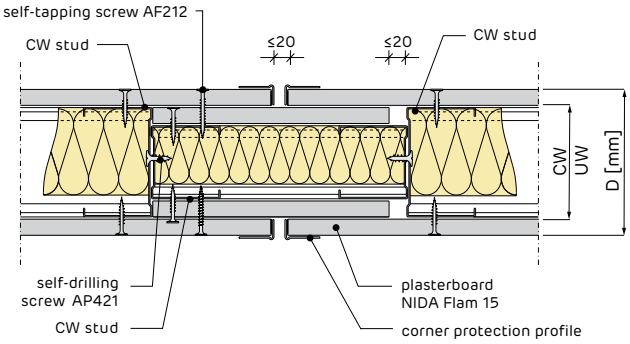

- If the wall is over 15m long, at maximum every 10m and at every expansion joint of the building, expansion joints shall be placed

Partition EI60 double lining

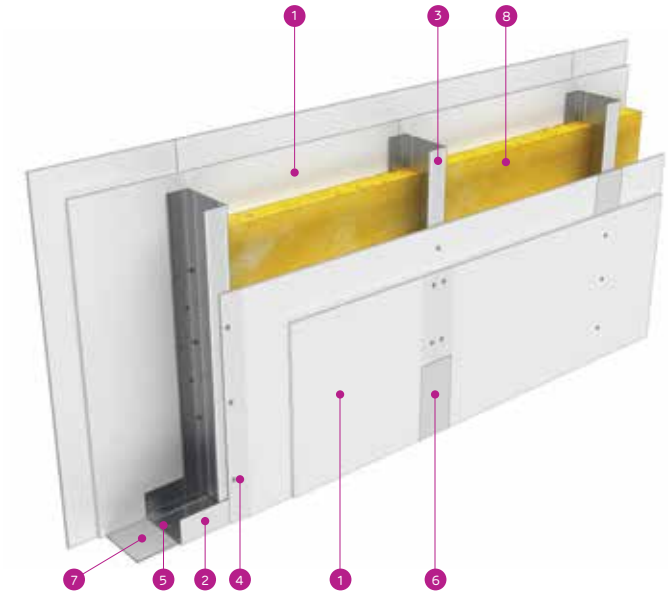

1. NIDA Standard 12.5 plasterboard
2. NIDA Metal UW profile
3. NIDA Metal CW profile
4. Self-tapping screw AF 212
5. Mechanical fixing (e.g. METAL DOWEL)*
6. Jointing tape and jointing compound NIDA Profesional
7. Mono adhesive insulating tape NIDA System
8. Mineral wool (optional)

SYSTEM PRESENTATION

- Metal structure: NIDA Metal UW&CW 50-75-100, thickness 0,60mm
- Type and number of plasterboards: 2x2 NIDA Standard 12,5
- Mineral wool: optional, only for acoustical considerations
- Weight: ≈45kg/m²

PERFORMANCES

SYSTEM	SYSTEM THICKNESS [mm]	TIP PROFIL NIDA Metal UW, CW (thickness 0.6mm)	STUD INTERAXIS [cm]	NIDA PLASTERBOARDS NUMBER AND THICKNESS	ACOUSTIC INSULATION INDEX R_w [dB]	
					Without mineral wool	With mineral wool
D	100	50	30/40/60	2x2 NIDA Standard 12,5 mm	43	51
	125	75	30/40/60	2x2 NIDA Standard 12,5 mm	45	52
	150	100	30/40/60	2x2 NIDA Standard 12,5 mm	46	53

Average quantities for 1 m² of system 3 m high and 5 m long

The loss coefficient is not included in the table. This shall be determined by the constructor depending on the specificity of the project.

PRODUCTS	UM	QUANTITIES					
		SIMPLE STUD			DOUBLE STUD		
		ϒ = 60 cm	**ϒ = 40 cm**	**ϒ = 30 cm**	**ϒ = 60 cm**	**ϒ = 40 cm**	**ϒ = 30 cm**
NIDA Standard 12,5 Plasterboard	m²	4,00	4,00	4,00	4,00	4,00	4,00
NIDA Metal UW profile	m	0,70	0,70	0,70	0,70	0,70	0,70
NIDA Metal CW profile	m	2,00	2,80	4,00	3,60	5,20	7,20
Self-tapping screw AF 212x25[1]	pcs.	15,00	18,00	30,00	15,00	18,00	30,00
Self-tapping screw AF 212x45[2]	pcs.	30,00	45,00	60,00	30,00	45,00	60,00
Self-drilling screw AP 421x9,5	pcs.	4,00	6,00	7,00	8,00	11,00	14,00
Mechanical fixing (e.g. METAL DOWEL)*	pcs.	1,50	1,50	1,50	1,50	1,50	1,50
NIDA Profesional jointing compound	kg	0,50	0,50	0,50	0,50	0,50	0,50
Joint tape**	m	3,50	3,50	3,50	3,50	3,50	3,50
NIDA Boardfix***	kg	0,10	0,10	0,10	0,10	0,10	0,10
Mono adhesive insulating tape	ml	0,80	0,80	0,80	0,80	0,80	0,80
Mineral wool clip (optional)	pcs.	1,00	1,00	1,00	1,00	1,00	1,00
Mineral wool (optional)	m²	1,00	1,00	1,00	1,00	1,00	1,00

[1] The first layer of boards - from metal structure
[2] The second layer of boards - from metal structure

*Mechanical fixing shall be selected by the specialized designer of the works, depending on the type of support (concrete, reinforced concrete, screeds, metal structures, wood...), maximum effective forces calculated in accordance with the law in force, the load bearing capacities of the selected fixing elements, as well as the mounting possibilities. In case of fire resistant systems, only steel connections shall be used;

**For fire resistant systems, glass wool is mandatory;

***For bonding sills on masonry, repairs and filling joints <5 mm.

INSTALLATION

BOARDS STAGGERING

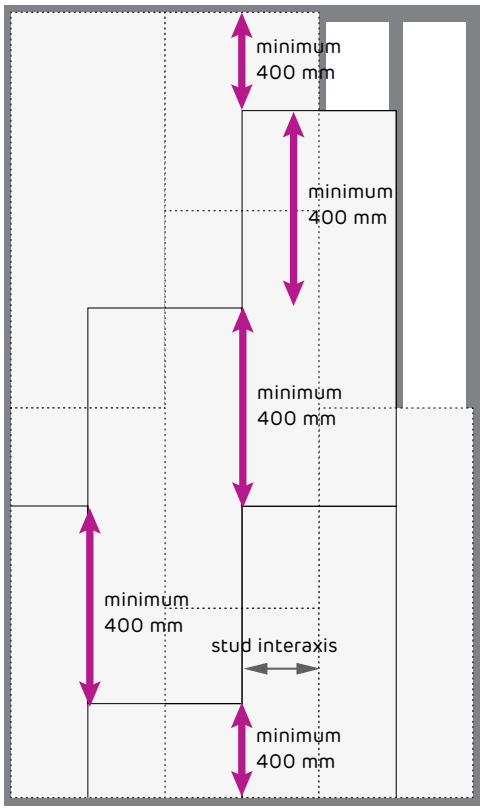

vertical positioning

*Horizontal and vertical joints should be staggered to avoid overlapping in case of multiple board layers

BOARD FIXING: STAGGERING OF JOINTS ON OPPOSITE SIDES, RELATED TO THE STUD

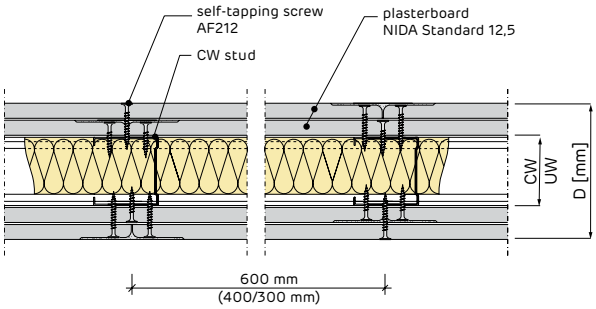

ASSEMBLY UNDER CONCRETE CEILING, THROUGH INTERRUPTED PLASTERBOARD CEILING

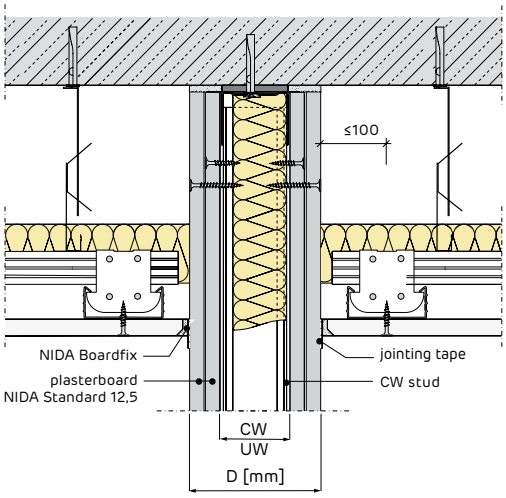

"T"-SHAPED ASSEMBLY

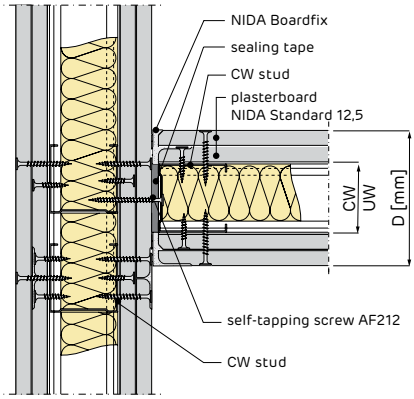

RIGID ASSEMBLY WITH CONCRETE WALL

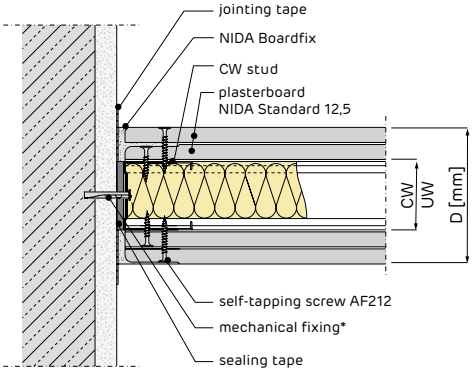

ASSEMBLY TO CONCRETE SLAB ON SCREED

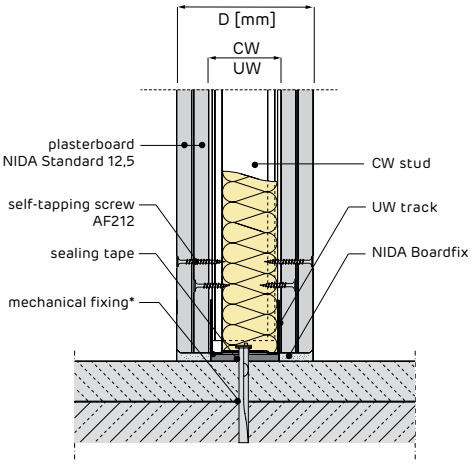

SLIDING ASSEMBLY TO CONCRETE WALL

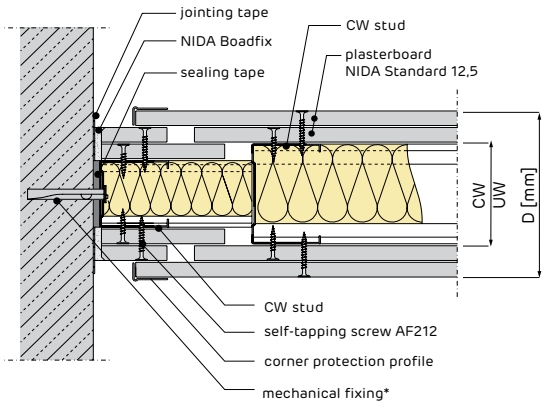

- If the wall is over 15m long, at maximum every 10m and at every expansion joint of the building, expansion joints shall be placed

Partition EI90

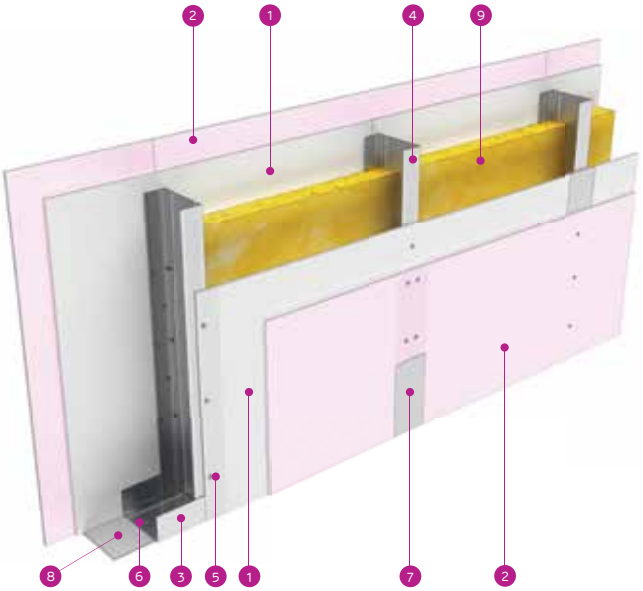

1. NIDA Standard 12,5 plasterboard
2. NIDA Flam 12,5 plasterboard
3. NIDA Metal UW profile
4. NIDA Metal CW profile
5. Self-tapping screw AF 212
6. Mechanical fixing (e.g. METAL DOWEL)*
7. Jointing tape and jointing compound NIDA Profesional
8. Mono adhesive insulating tape NIDA System
9. Mineral wool (optional)

SYSTEM PRESENTATION

- Metal structure: NIDA Metal UW&CW 50-75-100, thickness 0,60mm
- Type and number of plasterboards: 2x (1xNIDA Standard 12,5 + 1xNIDA Flam 12,5)
- Mineral wool: optional, only for acoustical considerations
- Weight: ≈50 kg/m²

PERFORMANCES

SYSTEM	SYSTEM THICKNESS [mm]	TIP PROFIL NIDA Metal UW, CW (thickness 0.6mm)	STUD INTERAXIS [cm]	NIDA PLASTERBOARDS NUMBER AND THICKNESS	ACOUSTIC INSULATION INDEX R_w [dB]	
					Without mineral wool	With mineral wool
D	100	50	30/40/60	2x (1xNIDA Standard 12,5 + 1xNIDA Flam 12,5)	43	51
	125	75	30/40/60	2x (1xNIDA Standard 12,5 + 1xNIDA Flam 12,5)	45	52
	150	100	30/40/60	2x (1xNIDA Standard 12,5 + 1xNIDA Flam 12,5)	46	53

Average quantities for 1 m² of system 3 m high and 5 m long

The loss coefficient is not included in the table. This shall be determined by the constructor depending on the specificity of the project.

PRODUCTS	UM	QUANTITIES					
		SIMPLE STUD			DOUBLE STUD		
		ϒ = 60 cm	**ϒ = 40 cm**	**ϒ = 30 cm**	**ϒ = 60 cm**	**ϒ = 40 cm**	**ϒ = 30 cm**
NIDA Standard 12,5 Plasterboard	m²	2,00	2,00	2,00	2,00	2,00	2,00
NIDA Flam 12,5 plasterboard	m²	2,00	2,00	2,00	2,00	2,00	2,00
NIDA Metal UW profile	m	0,70	0,70	0,70	0,70	0,70	0,70
NIDA Metal CW profile	m	2,00	2,80	4,00	3,60	5,20	7,20
Self-tapping screw AF 212x25(1)	pcs.	15,00	18,00	30,00	15,00	18,00	30,00
Self-tapping screw AF 212x45(2)	pcs.	30,00	45,00	60,00	30,00	45,00	60,00
Self-drilling screw AP 421x9,5	pcs.	4,00	6,00	7,00	8,00	11,00	14,00
Mechanical fixing (e.g. METAL DOWEL)*	pcs.	1,50	1,50	1,50	1,50	1,50	1,50
NIDA Profesional jointing compound	kg	0,50	0,50	0,50	0,50	0,50	0,50
Joint tape**	m	3,50	3,50	3,50	3,50	3,50	3,50
NIDA Boardfix***	kg	0,10	0,10	0,10	0,10	0,10	0,10
Mono adhesive insulating tape	ml	0,80	0,80	0,80	0,80	0,80	0,80
Mineral wool clip (optional)	pcs.	1,00	1,00	1,00	1,00	1,00	1,00
Mineral wool (optional)	m²	1,00	1,00	1,00	1,00	1,00	1,00

(1) The first layer of boards - from metal structure
(2) The second layer of boards - from metal structure

*Mechanical fixing shall be selected by the specialized designer of the works, depending on the type of support (concrete, reinforced concrete, screeds, metal structures, wood...), maximum effective forces calculated in accordance with the law in force, the load bearing capacities of the selected fixing elements, as well as the mounting possibilities. In case of fire resistant systems, only steel connections shall be used;

**For fire resistant systems, glass wool is mandatory;

***For bonding sills on masonry, repairs and filling joints <5 mm.

INSTALLATION

BOARDS STAGGERING

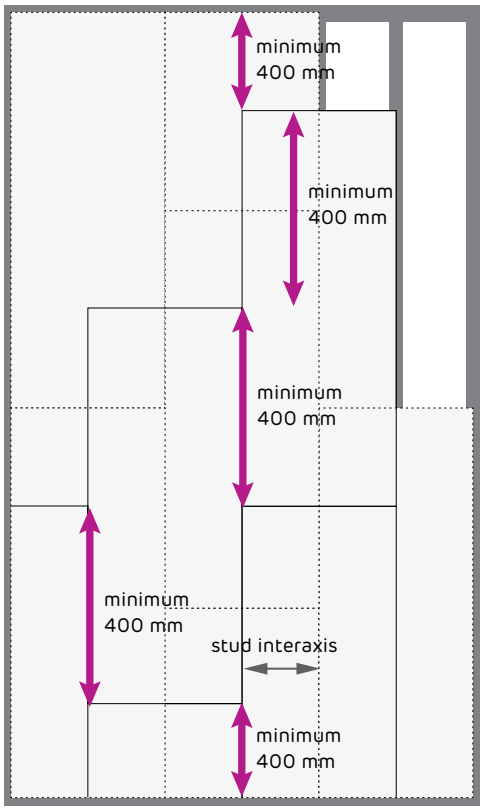

vertical positioning

*Horizontal and vertical joints should be staggered to avoid overlapping in case of multiple board layers

BOARD FIXING: STAGGERING OF JOINTS ON OPPOSITE SIDES, RELATED TO THE STUD

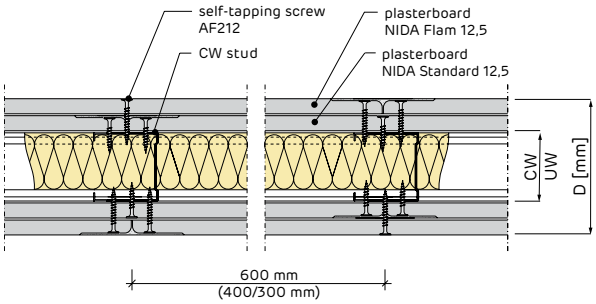

ASSEMBLY UNDER CONCRETE CEILING, THROUGH INTERRUPTED PLASTERBOARD CEILING

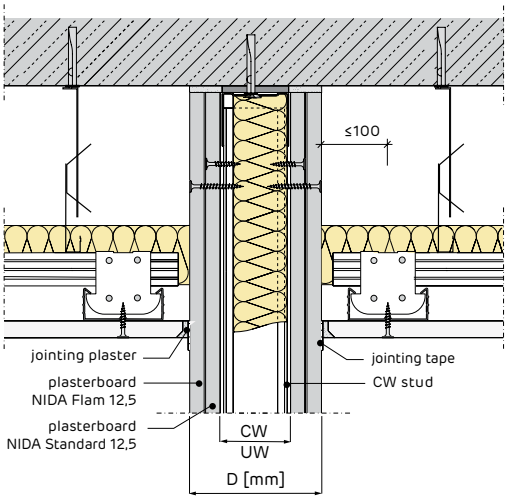

"T"-SHAPED ASSEMBLY

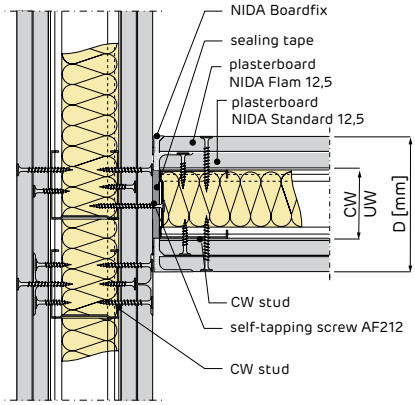

RIGID ASSEMBLY WITH CONCRETE WALL

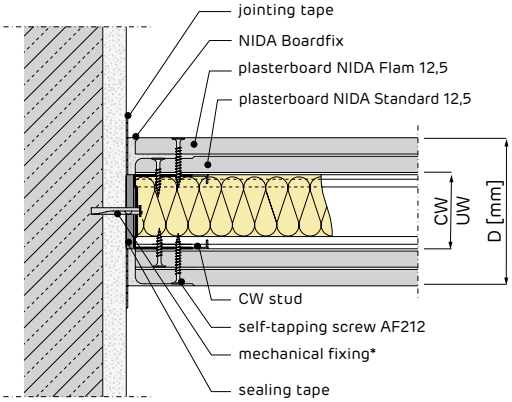

ASSEMBLY TO CONCRETE SLAB ON SCREED

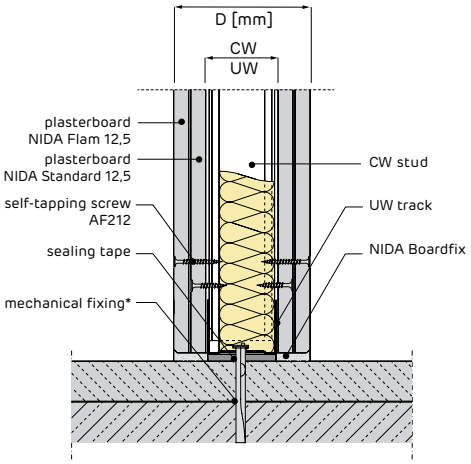

SLIDING ASSEMBLY TO CONCRETE WALL

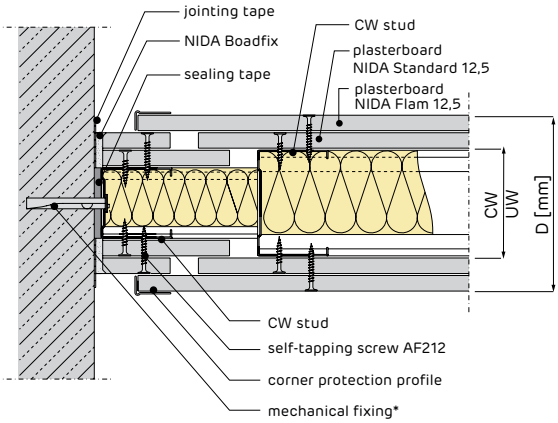

- If the wall is over 15m long, at maximum every 10m and at every expansion joint of the building, expansion joints shall be placed

Partition EI120

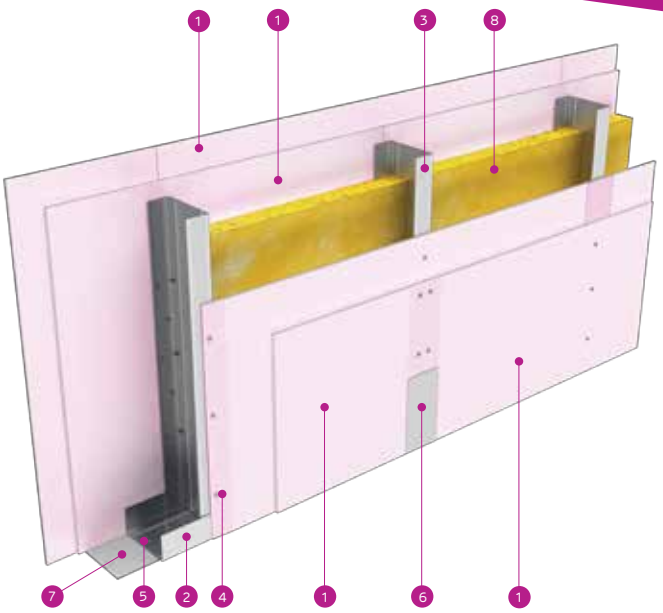

1. NIDA Flam 12,5 plasterboard
2. NIDA Metal UW profile
3. NIDA Metal CW profile
4. Self-tapping screw AF 212
5. Mechanical fixing (e.g. METAL DOWEL)*
6. Jointing tape and jointing compound NIDA Profesional
7. Mono adhesive insulating tape NIDA System
8. Mineral wool (optional)

SYSTEM PRESENTATION

- Metal structure: NIDA Metal UW&CW 50-75-100, thickness 0,60mm
- Type and number of plasterboards: 2x2 NIDA Flam 12,5
- Mineral wool: optional, only for acoustical considerations
- Weight: ≈55kg/m²

PERFORMANCES

SYSTEM	SYSTEM THICKNESS [mm]	TIP PROFIL NIDA Metal UW, CW (thickness 0.6mm)	STUD INTERAXIS [cm]	NIDA PLASTERBOARDS NUMBER AND THICKNESS	ACOUSTIC INSULATION INDEX R_w [dB]	
					Without mineral wool	With mineral wool
D	100	50	30/40/60	2x2 NIDA Flam 12,5 mm	43	51
	125	75	30/40/60	2x2 NIDA Flam 12,5 mm	45	52
	150	100	30/40/60	2x2 NIDA Flam 12,5 mm	46	53

Average quantities for 1 m² of system 3 m high and 5 m long

The loss coefficient is not included in the table. This shall be determined by the constructor depending on the specificity of the project.

PRODUCTS	UM	QUANTITIES					
		SIMPLE STUD			DOUBLE STUD		
		𝔛 = 60 cm	**𝔛 = 40 cm**	**𝔛 = 30 cm**	**𝔛 = 60 cm**	**𝔛 = 40 cm**	**𝔛 = 30 cm**
NIDA Flam 12,5 plasterboard	m²	4,00	4,00	4,00	4,00	4,00	4,00
NIDA Metal UW profile	m	0,70	0,70	0,70	0,70	0,70	0,70
NIDA Metal CW profile	m	2,00	2,80	4,00	3,60	5,20	7,20
Self-tapping screw AF 212x25(1)	pcs.	15,00	18,00	30,00	15,00	18,00	30,00
Self-tapping screw AF 212x45(2)	pcs.	30,00	45,00	60,00	30,00	45,00	60,00
Self-drilling screw AP 421x9,5	pcs.	4,00	6,00	7,00	8,00	11,00	14,00
Mechanical fixing (e.g. METAL DOWEL)*	pcs.	1,50	1,50	1,50	1,50	1,50	1,50
NIDA Profesional jointing compound	kg	0,50	0,50	0,50	0,50	0,50	0,50
Joint tape**	m	3,50	3,50	3,50	3,50	3,50	3,50
NIDA Boardfix***	kg	0,10	0,10	0,10	0,10	0,10	0,10
Mono adhesive insulating tape	ml	0,80	0,80	0,80	0,80	0,80	0,80
Mineral wool clip (optional)	pcs.	1,00	1,00	1,00	1,00	1,00	1,00
Mineral wool (optional)	m²	1,00	1,00	1,00	1,00	1,00	1,00

(1) The first layer of boards - from metal structure
(2) The second layer of boards - from metal structure

*Mechanical fixing shall be selected by the specialized designer of the works, depending on the type of support (concrete, reinforced concrete, screeds, metal structures, wood...), maximum effective forces calculated in accordance with the law in force, the load bearing capacities of the selected fixing elements, as well as the mounting possibilities. In case of fire resistant systems, only steel connections shall be used;

**For fire resistant systems, glass wool is mandatory;

***For bonding sills on masonry, repairs and filling joints <5 mm.

INSTALLATION

BOARDS STAGGERING

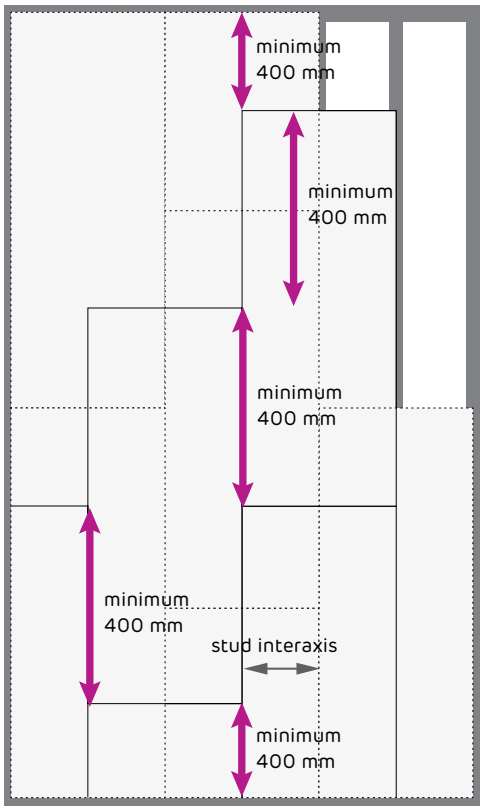

vertical positioning

*Horizontal and vertical joints should be staggered to avoid overlapping in case of multiple board layers

BOARD FIXING: STAGGERING OF JOINTS ON OPPOSITE SIDES, RELATED TO THE STUD

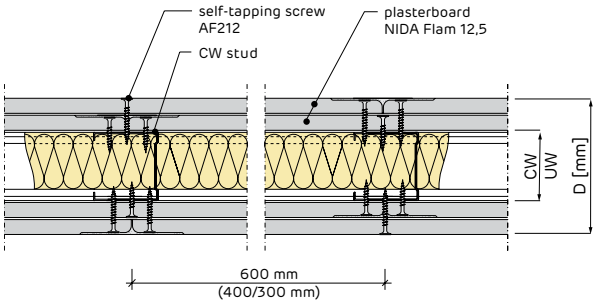

ASSEMBLY UNDER CONCRETE CEILING, THROUGH INTERRUPTED PLASTERBOARD CEILING

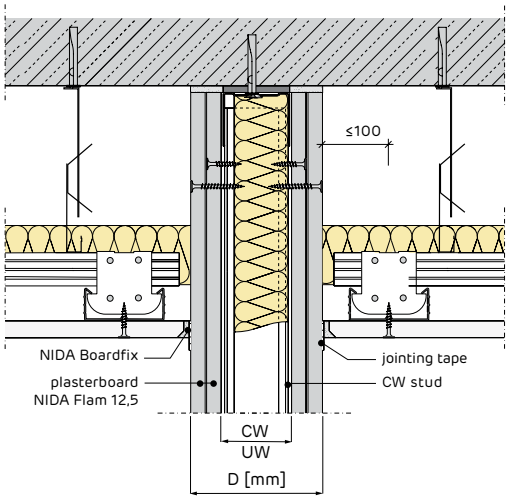

"T"-SHAPED ASSEMBLY

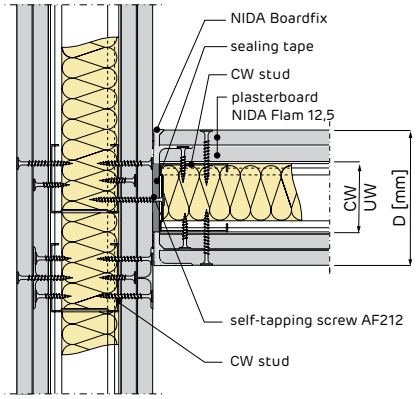

RIGID ASSEMBLY WITH CONCRETE WALL

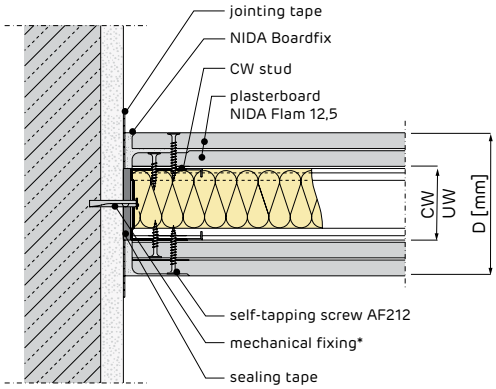

ASSEMBLY TO CONCRETE SLAB ON SCREED

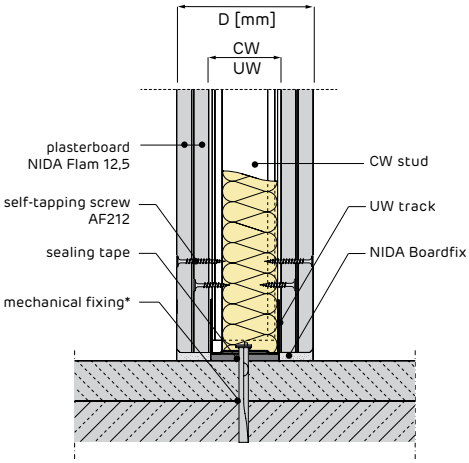

SLIDING ASSEMBLY TO CONCRETE WALL

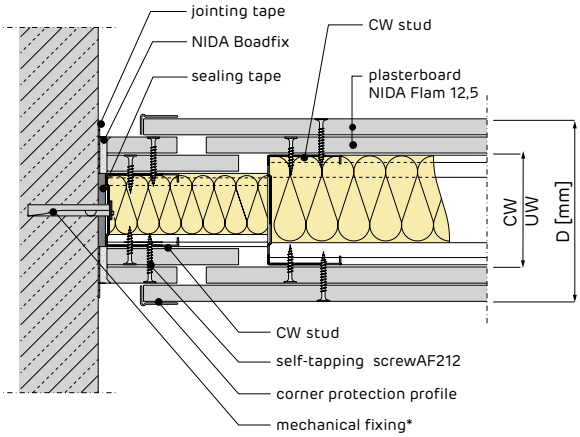

- If the wall is over 15m long, at maximum every 10m and at every expansion joint of the building, expansion joints shall be placed

Partition EI180

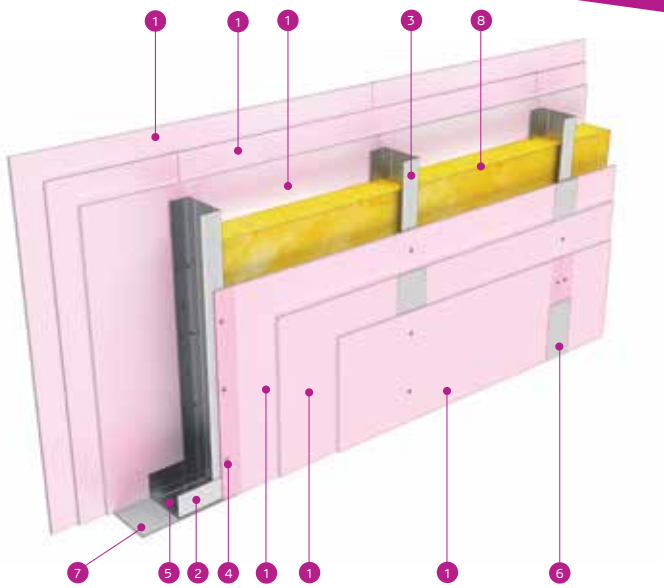

1. NIDA Flam 12,5 plasterboard
2. NIDA Metal UW profile
3. NIDA Metal CW profile
4. Self-tapping screw AF 212
5. Mechanical fixing (e.g. METAL DOWEL)*
6. Jointing tape and jointing compound NIDA Profesional
7. Mono adhesive insulating tape NIDA System
8. Mineral wool (optional)

SYSTEM PRESENTATION

- Metal structure: NIDA Metal UW&CW 50-75-100, thickness 0,60mm
- Type and number of plasterboards: 3x3 NIDA Flam 12,5
- Mineral wool: optional, only for acoustical considerations
- Weight: ≈75kg/m²

PERFORMANCES

SYSTEM	SYSTEM THICKNESS [mm]	TIP PROFIL NIDA Metal UW, CW (thickness 0.6mm)	STUD INTERAXIS [cm]	NIDA PLASTERBOARDS NUMBER AND THICKNESS	ACOUSTIC INSULATION INDEX R_w [dB]	
					Without mineral wool	With mineral wool
D	125	50	30/40/60	3x3 NIDA Flam 12,5 mm	48	56
	150	75	30/40/60	3x3 NIDA Flam 12,5 mm	50	57
	175	100	30/40/60	3x3 NIDA Flam 12,5 mm	51	58

Average quantities for 1 m² of system 3 m high and 5 m long

The loss coefficient is not included in the table. This shall be determined by the constructor depending on the specificity of the project.

PRODUCTS	UM	QUANTITIES					
		SIMPLE STUD			DOUBLE STUD		
		ϒ = 60 cm	**ϒ = 40 cm**	**ϒ = 30 cm**	**ϒ = 60 cm**	**ϒ = 40 cm**	**ϒ = 30 cm**
NIDA Flam 12,5 plasterboard	m²	6,00	6,00	6,00	6,00	6,00	6,00
NIDA Metal UW profile	m	0,70	0,70	0,70	0,70	0,70	0,70
NIDA Metal CW profile	m	2,00	2,80	4,00	3,60	5,20	7,20
Self-tapping screw AF 212x25(1)	pcs.	15,00	18,00	30,00	15,00	18,00	30,00
Self-tapping screw AF 212x45(2)	pcs.	15,00	18,00	30,00	15,00	18,00	30,00
Self-tapping screw AP 212x70(3)	pcs.	30,00	45,00	60,00	30,00	45,00	60,00
Self-drilling screw AP 421x9,5	pcs.	4,00	6,00	7,00	8,00	11,00	14,00
Mechanical fixing (e.g. METAL DOWEL)*	pcs.	1,50	1,50	1,50	1,50	1,50	1,50
NIDA Profesional jointing compound	kg	0,75	0,75	0,75	0,75	0,75	0,75
Joint tape**	m	3,50	3,50	3,50	3,50	3,50	3,50
NIDA Boardfix***	kg	0,10	0,10	0,10	0,10	0,10	0,10
Mono adhesive insulating tape	ml	0,50	0,50	0,50	0,50	0,50	0,50
Mineral wool clip (optional)	pcs.	1,00	1,00	1,00	1,00	1,00	1,00
Mineral wool (optional)	m²	1,00	1,00	1,00	1,00	1,00	1,00

(1) The first layer of boards - from metal structure
(2) The second layer of boards - from metal structure
(3) The third layer of boards from metal structure *Mechanical fixing shall be selected by the specialized designer of the works, depending on the type of support (concrete, reinforced concrete, screeds, metal structures, wood...), maximum effective forces calculated in accordance with the law in force, the load bearing capacities of the selected fixing elements, as well as the mounting possibilities. In case of fire resistant systems, only steel connections shall be used;

**For fire resistant systems, glass wool is mandatory;

***For bonding sills on masonry, repairs and filling joints <5 mm.

INSTALLATION

BOARDS STAGGERING

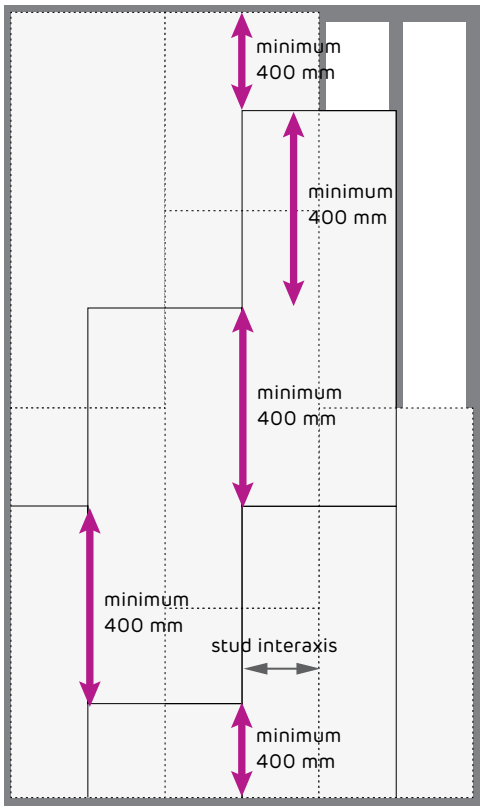

vertical positioning

*Horizontal and vertical joints should be staggered to avoid overlapping in case of multiple board layers

BOARD FIXING: STAGGERING OF JOINTS ON OPPOSITE SIDES, RELATED TO THE STUD

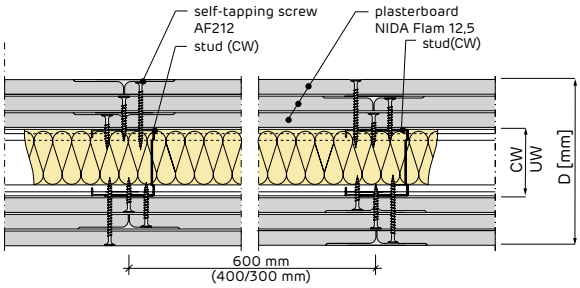

SLIDING ASSEMBLY TO CONCRETE WALL

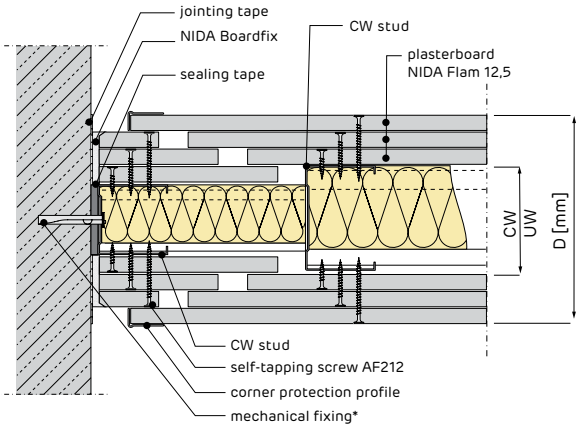

"T"-SHAPED ASSEMBLY

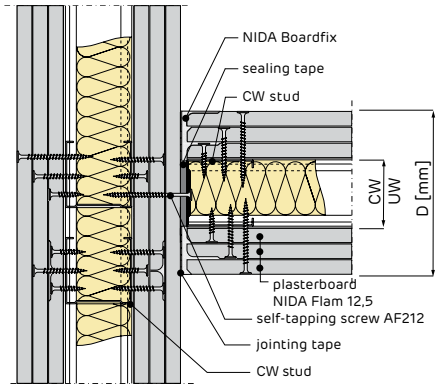

RIGID ASSEMBLY WITH CONCRETE WALL

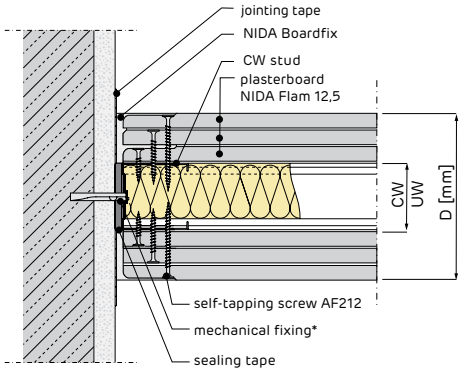

ASSEMBLY TO CONCRETE SLAB WITH SCREED

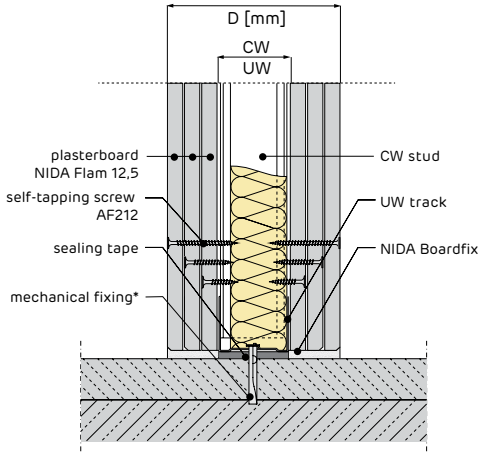

ASSEMBLY UNDER CONCRETE FLOOR, THROUGH INTERRUPTED PLASTERBOARD CEILING

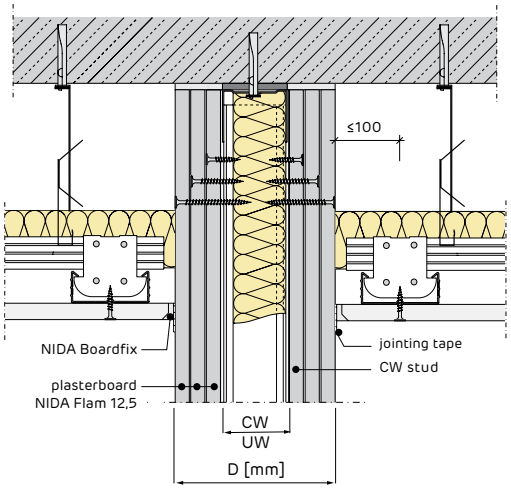

MINISTERUL DEZVOLTĂRII REGIONALE ŞI ADMINISTRATIEI PUBLICE
CONSILIUL TEHNIC PERMANENT PENTRU CONSTRUCŢII

Agrement Tehnic
017-03/150-2015

PROCEDEU DE REALIZARE A PERETILOR DIN GIPS CARTON REZISTENTI LA FOC NIDA SYSTEM
FIRE RESISTANT WALLS OF TYPE NIDA SYSTEM
MURS COUPE FEU TYPE NIDA SYSTEM
BRANDSCHUTZWAND TYP NIDA SYSTEM

PRODUCĂTOR: *SC SINIAT SA*
Str. Drumul Leordeni nr. 106, sector 4, Bucuresti
Tel. : 021.3075324, Fax: 021.3075373

TITULAR AGREMENT TEHNIC: *SC SINIAT SA*
Str. Drumul Leordeni nr. 106, sector 4, Bucuresti
Tel. : 021.3075324, Fax: 021.3075373

ELABORATOR AGREMENT TEHNIC: *INSTITUTUL EUROPEAN PENTRU ŞTIINŢE TERMICE*
Bd. Pache Protopopescu nr. 66, Sector 2
Bucureşti – ROMANIA

Grupa specializată nr. 3: *Protecţii la foc – termotehnică – acustică – protecţii hidrofuge şi învelitori*

Prezentul agrement tehnic este valabil până la data de 31.01.2018 numai însoţit de AVIZUL TEHNIC al Consiliului Tehnic Permanent pentru Construcţii şi nu ţine loc de certificat de calitate

Linings

EI30 LINING

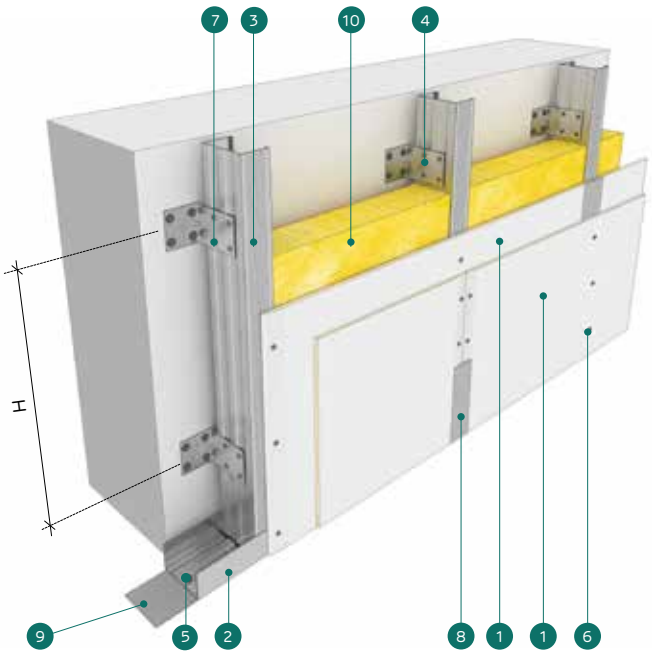

1. NIDA Standard 12,5 plasterboard
2. NIDA Metal UW profile
3. NIDA Metal CW profile
4. Steel angle
5. Mechanical fixing (e.g. METAL DOWEL)*
6. Self-tapping screw AF 212
7. Self-drilling screw AP 421
8. Jointing tape and jointing compound NIDA Profesional
9. Mono adhesive insulating tape NIDA System
10. Mineral wool (optional)

SYSTEM PRESENTATION

Metal structure: NIDA Metal UW&CW 50-75-100, thickness 0,60mm, NIDA Metal CD60

Type and number of plasterboards: 2xNIDA Standard 12,5

Mineral wool: optional, only for acoustical considerations

Weight: ≈25 kg/m²

PERFORMANCES

Profiles at interaxis of 60 cm	Number of NIDA plasterboards	Maximum distance between supporting elements H [m]
CW 50	2xNIDA Standard 12,5	2,10
CW 75	2xNIDA Standard 12,5	2,65
CW 100	2xNIDA Standard 12,5	3,00

* For partitions higher than 7.6m, please contact Siniat Tehnical Assistance

Average quantities for 1 m² of system 3 m high and 5 m long

The loss coefficient is not included in the table. This shall be determined by the constructor depending on the specificity of the project.

PRODUCTS	UM	QUANTITIES DOUBLE LINING	
		ϒ= 60cm	ϒ= 40cm
NIDA Standard 12,5 Plasterboard	m²	2,00	2,00
NIDA Metal UW profile	ml	0,70	0,70
NIDA Metal CW profile	ml	2,00	2,80
Steel angle	pcs.	0,80	1,20
Mechanical fixing (e.g. METAL DOWEL)*	pcs.	2,90	3,60
Self-tapping screw AF 212x25(1)	pcs.	6,00	8,00
Self-tapping screw AF 212x45(2)	pcs.	12,00	16,00
Self-drilling screw AP 421x13	pcs.	6,00	9,00
Jointing tape**	ml	2,00	2,00
NIDA Profesional jointing compound	kg	0,25	0,25
Sealing tape	ml	0,70	0,80
Mineral wool (optional)	m²	1,00	1,00
NIDA Boardfix ***	kg	0,10	0,10

(1) The first layer of boards - from metal structure
(2) The second layer of boards - from metal structure

*Mechanical fixing shall be selected by the specialized designer of the works, depending on the type of support (concrete, reinforced concrete, screeds, metal structures, wood...), maximum effective forces calculated in accordance with the law in force, the load bearing capacities of the selected fixing elements, as well as the mounting possibilities. In case of fire resistant systems, only steel connections shall be used;

**For fire resistant systems, glass wool is mandatory;

***For bonding sills on masonry, repairs and filling joints <5 mm.

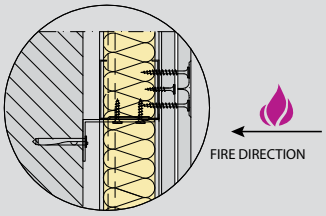

INSTALLATION

CROSS SECTION

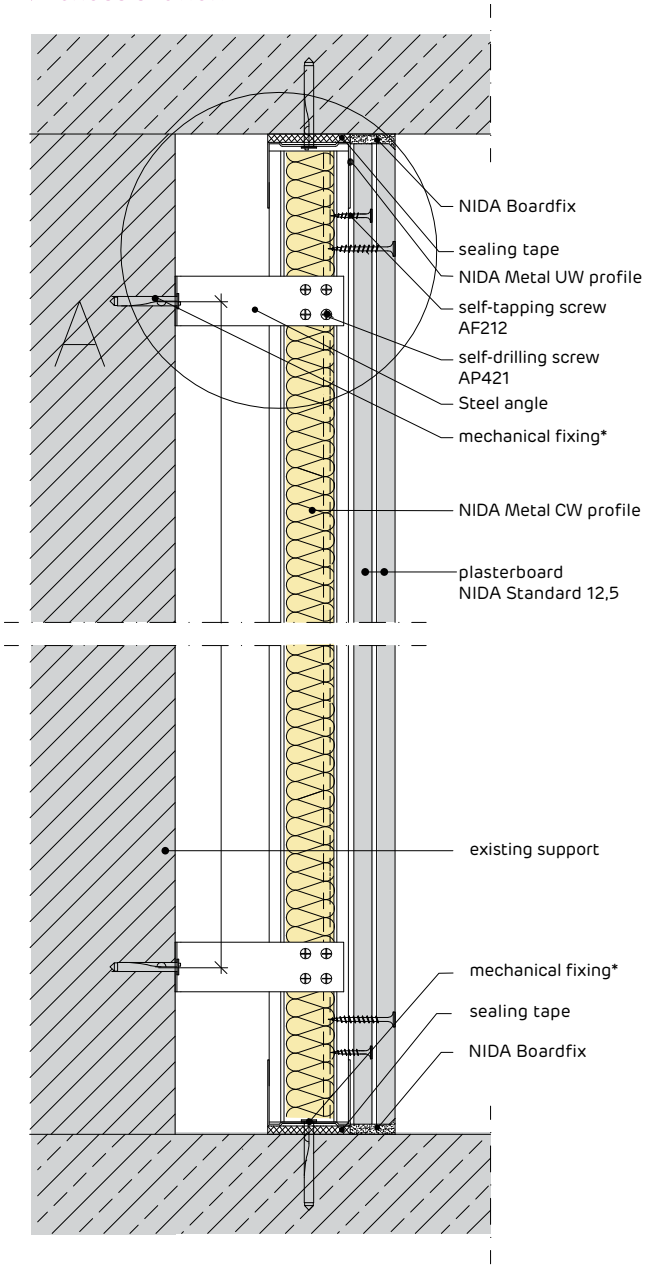

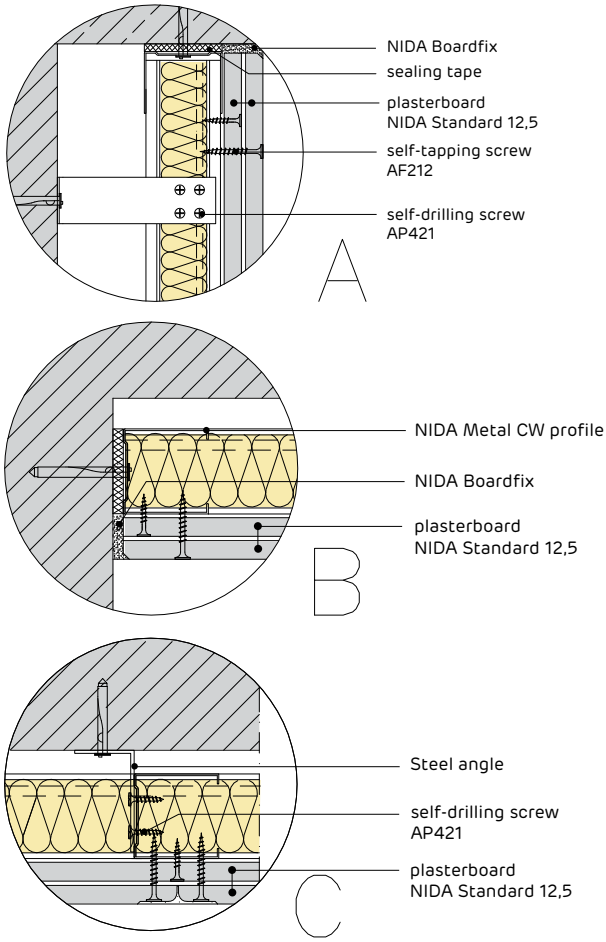

LONGITUDINAL SECTION
JOINT WITH MASSIVE WALL

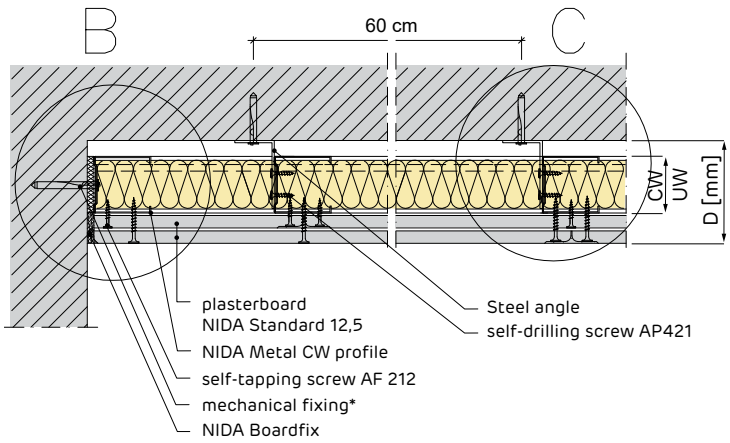

BOARDS STAGGERING

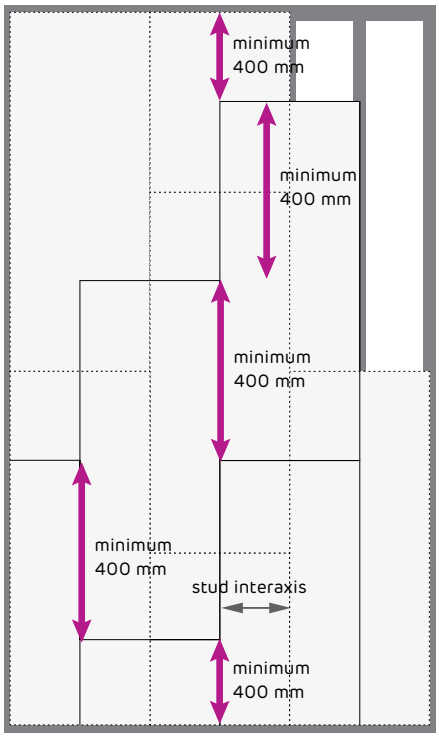

vertical positioning

* Horizontal and vertical joints should be staggered to avoid overlapping in case of multiple board layers

Lining EI45

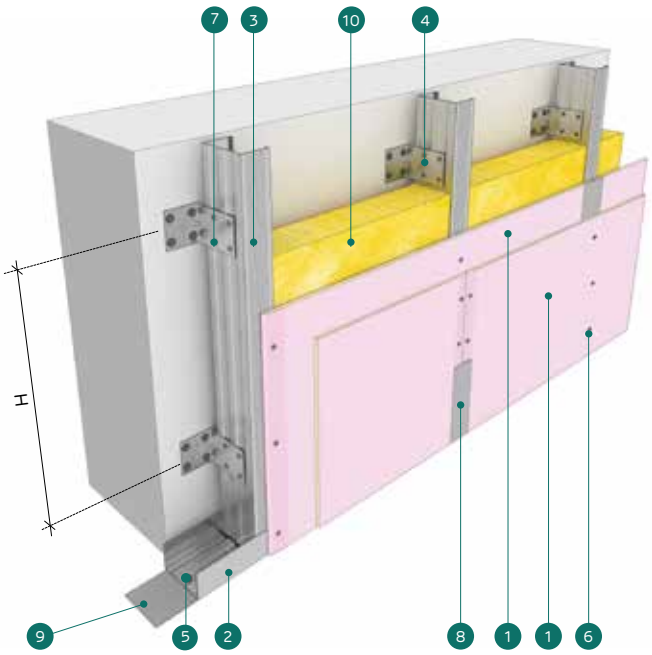

1. NIDA Flam 12,5 plasterboard
2. NIDA Metal UW profile
3. NIDA Metal CW profile
4. Steel angle
5. Mechanical fixing (e.g. METAL DOWEL)*
6. Self-tapping screw AF 212
7. Self-drilling screw AP 421
8. Jointing tape and jointing compound NIDA Profesional
9. Mono adhesive insulating tape NIDA System
10. Mineral wool (optional)

SYSTEM PRESENTATION

- Metal structure: NIDA Metal UW&CW 50-75-100, thickness 0,60mm, NIDA Metal CD60
- Type and number of plasterboards: 2xNIDA Flam 12,5
- Mineral wool: optional, only for acoustical considerations
- Weight: ≈30kg/m²

PERFORMANCES

Profiles at interaxis of 60 cm	Number of NIDA plasterboards	Maximum distance between supporting elements H [m]
CW 50	2xNIDA Flam 12,5	2,10
CW 75	2xNIDA Flam 12,5	2,65
CW 100	2xNIDA Flam 12,5	3,00

* For partitions higher than 7.6m, please contact Siniat Tehnical Assistance

Average quantities for 1 m² of system 3 m high and 5 m long

The loss coefficient is not included in the table. This shall be determined by the constructor depending on the specificity of the project.

PRODUCTS	UM	QUANTITIES DOUBLE LINING	
		ϒ= 60cm	ϒ= 40cm
NIDA Flam 12,5 plasterboard	m²	2,00	2,00
NIDA Metal UW profile	ml	0,70	0,70
NIDA Metal CW profile	ml	2,00	2,80
Steel angle	pcs.	0,80	1,20
Mechanical fixing (e.g. METAL DOWEL)*	pcs.	2,90	3,60
Self-tapping screw AF 212x25[1]	pcs.	6,00	8,00
Self-tapping screw AF 212x45[2]	pcs.	12,00	16,00
Self-drilling screw AP 421x13	pcs.	6,00	9,00
Joint tape**	ml	2,00	2,00
NIDA Profesional jointing compound	kg	0,25	0,25
Sealing tape	ml	0,70	0,80
Mineral wool (optional)	m²	1,00	1,00
NIDA Boardfix ***	kg	0,10	0,10

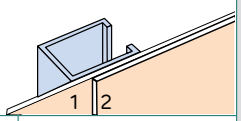

[1] The first layer of boards - from metal structure
[2] The second layer of boards - from metal structure

*Mechanical fixing shall be selected by the specialized designer of the works, depending on the type of support (concrete, reinforced concrete, screeds, metal structures, wood...), maximum effective forces calculated in accordance with the law in force, the load bearing capacities of the selected fixing elements, as well as the mounting possibilities. In case of fire resistant systems, only steel connections shall be used;

**For fire resistant systems, glass wool is mandatory;

***For bonding sills on masonry, repairs and filling joints <5 mm.

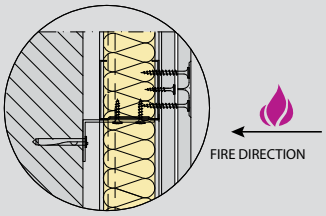

INSTALLATION

CROSS SECTION

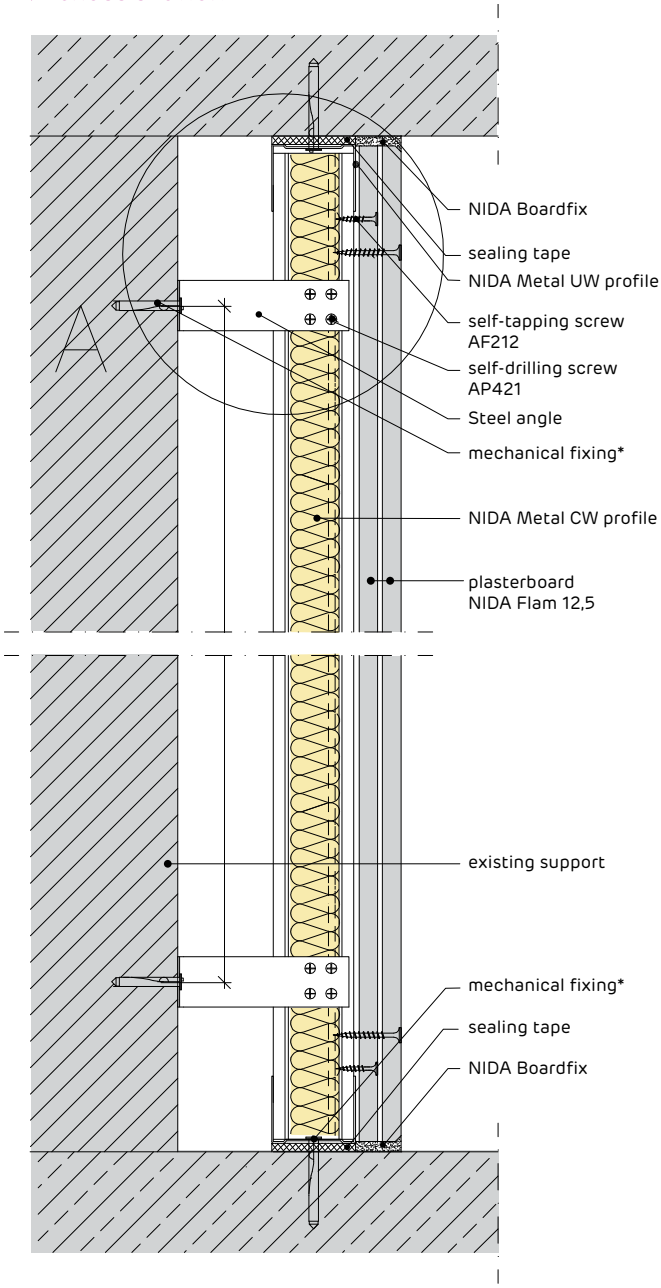

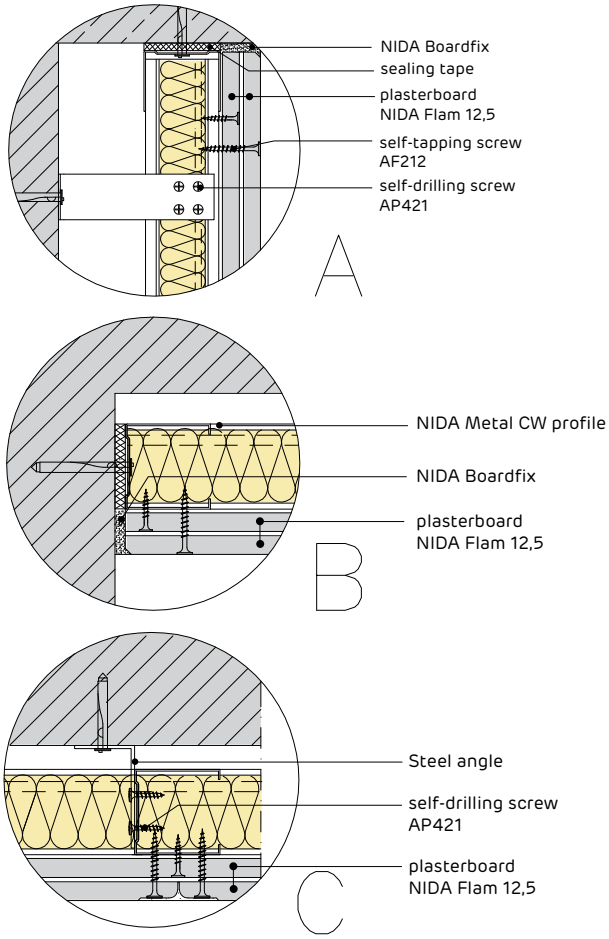

LONGITUDINAL SECTION
JOINT WITH MASSIVE WALL

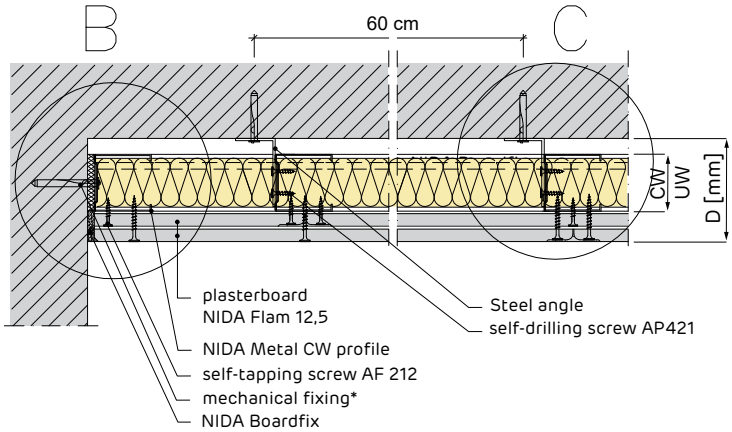

BOARDS STAGGERING

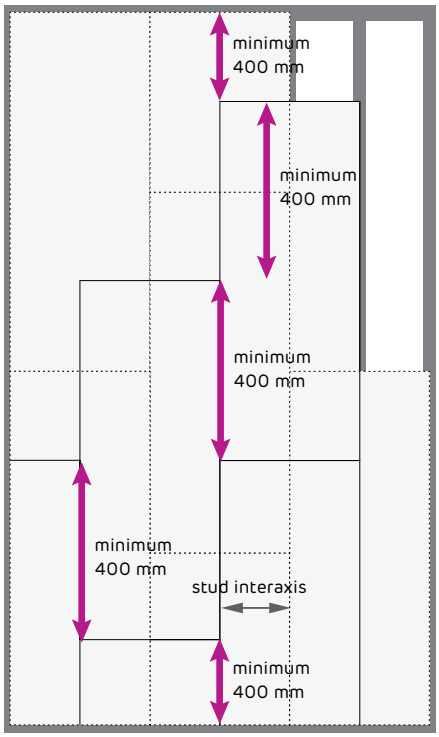

vertical positioning

* Horizontal and vertical joints should be staggered to avoid overlapping in case of multiple board layers

Lining EI60

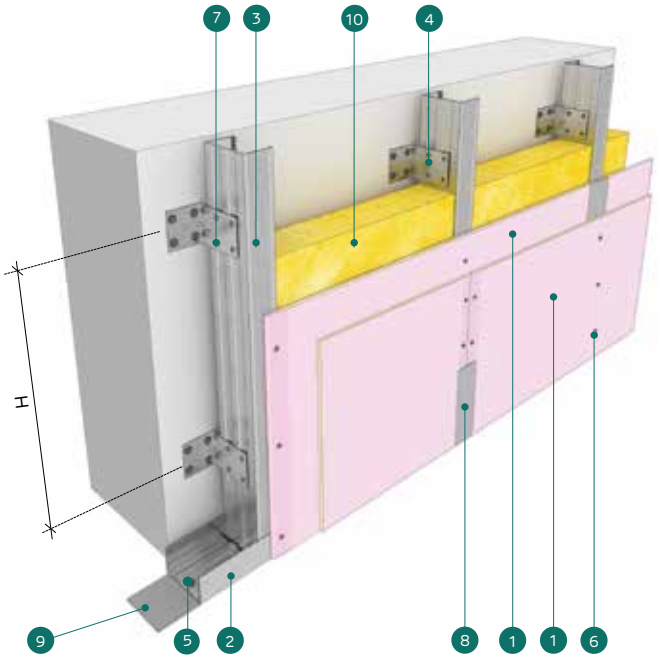

1. NIDA Flam 15 plasterboard
2. NIDA Metal UW profile
3. NIDA Metal CW profile
4. Steel angle
5. Mechanical fixing (e.g. METAL DOWEL)*
6. Self-tapping screw AF 212
7. Self-drilling screw AP 421
8. Jointing tape and jointing compound NIDA Profesional
9. Mono adhesive insulating tape NIDA System
10. Mineral wool (optional)

SYSTEM PRESENTATION

- Metal structure: NIDA Metal UW&CW 50-75-100, thickness 0,60mm, NIDA Metal CD60
- Type and number of plasterboards: 2xNIDA Flam 15
- Mineral wool: optional, only for acoustical considerations
- Weight: ≈40 kg/m²

PERFORMANCES

Profiles at interaxis of 60 cm	Number of NIDA plasterboards	Maximum distance between supporting elements H [m]
CW 50	2xNIDA Flam 15	2,10
CW 75	2xNIDA Flam 15	2,65
CW 100	2xNIDA Flam 15	3,00

* For partitions higher than 7.6m, please contact Siniat Tehnical Assistance

Average quantities for 1 m² of system 3 m high and 5 m long

The loss coefficient is not included in the table. This shall be determined by the constructor depending on the specificity of the project.

PRODUCTS	UM	QUANTITIES DOUBLE LINING	
		ϒ= 60cm	ϒ= 40cm
NIDA Flam 15 plasterboard	m²	2,00	2,00
NIDA Metal UW profile	ml	0,70	0,70
NIDA Metal CW profile	ml	2,00	2,80
Steel angle	pcs.	0,80	1,20
Mechanical fixing (e.g. METAL DOWEL)*	pcs.	2,90	3,60
Self-tapping screw AF 212x35[1]	pcs.	6,00	8,00
Self-tapping screw AF 212x55[2]	pcs.	12,00	16,00
Self-drilling screw AP 421x13	pcs.	6,00	9,00
Joint tape**	ml	2,00	2,00
NIDA Profesional jointing compound	kg	0,25	0,25
Sealing tape	ml	0,70	0,80
Mineral wool (optional)	m²	1,00	1,00
NIDA Boardfix ***	kg	0,10	0,10

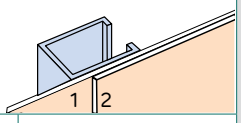

[1] The first layer of boards - from metal structure
[2] The second layer of boards - from metal structure

*Mechanical fixing shall be selected by the specialized designer of the works, depending on the type of support (concrete, reinforced concrete, screeds, metal structures, wood...), maximum effective forces calculated in accordance with the law in force, the load bearing capacities of the selected fixing elements, as well as the mounting possibilities. In case of fire resistant systems, only steel connections shall be used;

**For fire resistant systems, glass wool is mandatory;

***For bonding sills on masonry, repairs and filling joints <5 mm.

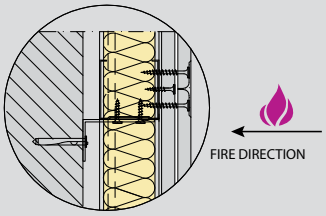

INSTALLATION

CROSS SECTION

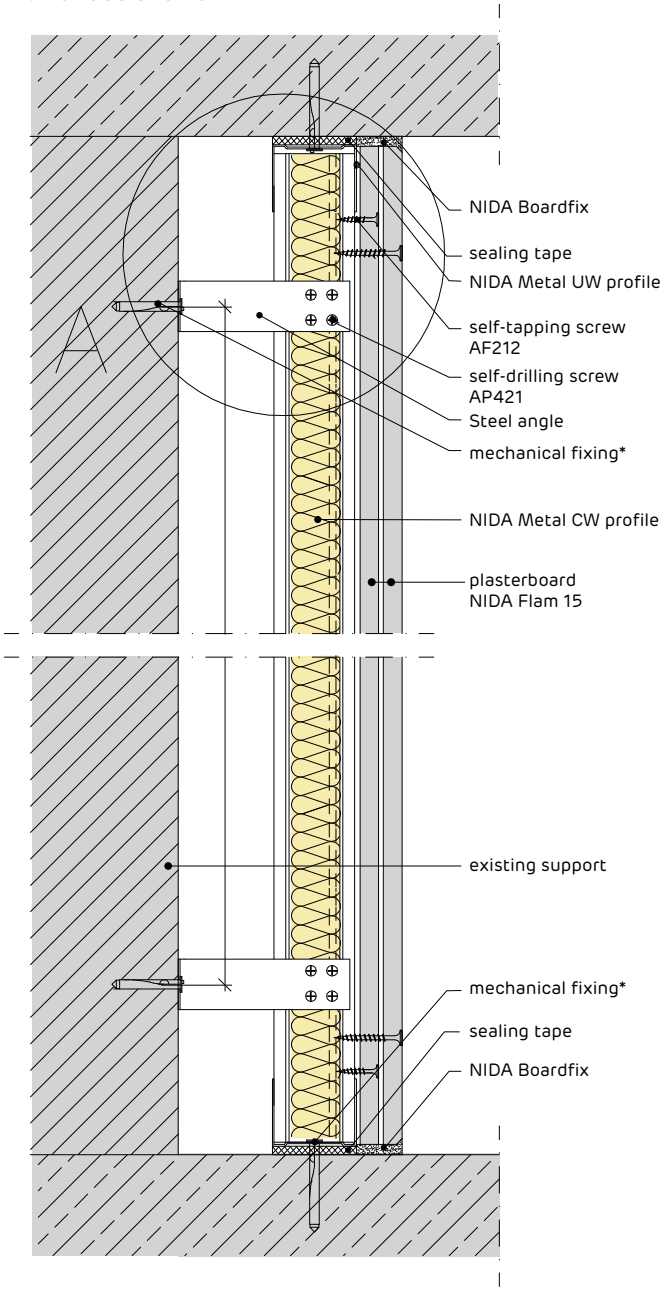

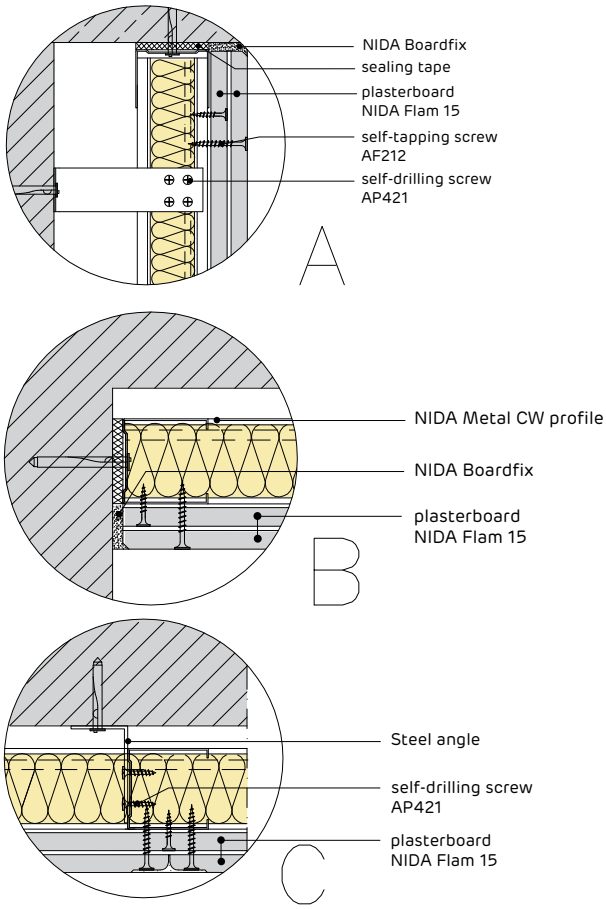

LONGITUDINAL SECTION
JOINT WITH MASSIVE WALL

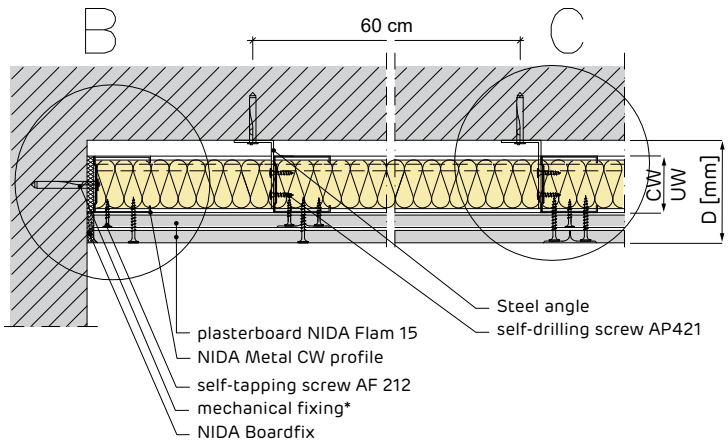

BOARDS STAGGERING

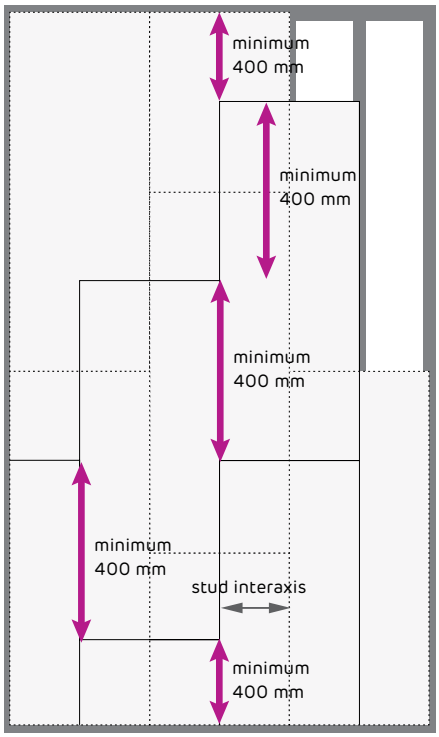

vertical positioning

* Horizontal and vertical joints should be staggered to avoid overlapping in case of multiple board layers

Lining EI90

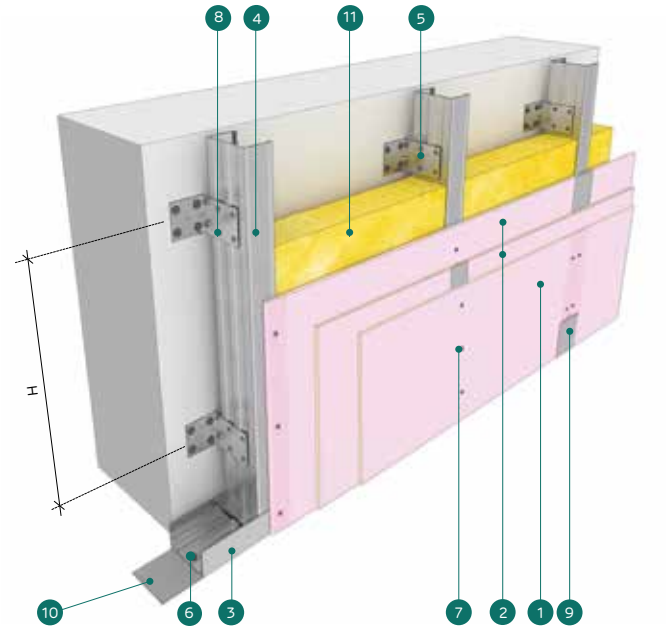

1. NIDA Flam 15 plasterboard
2. NIDA Flam 12,5 plasterboard
3. NIDA Metal UW profile
4. NIDA Metal CW profile
5. Steel angle
6. Mechanical fixing (e.g. METAL DOWEL)*
7. Self-tapping screw AF 212
8. Self-drilling screw AP 421
9. Jointing tape and jointing compound NIDA Profesional
10. Mono adhesive insulating tape NIDA System
11. Mineral wool (optional)

SYSTEM PRESENTATION

Metal structure: NIDA Metal UW&CW 50-75-100, thickness 0,60mm, NIDA Metal CD60

Type and number of plasterboards: 2xNIDA Flam 12,5 + 1xNIDA Flam 15

Mineral wool: optional, only for acoustical considerations

Weight: ≈50 kg/m²

PERFORMANCES

Profiles at interaxis of 60 cm	Number of NIDA plasterboards	Maximum distance between supporting elements H [m]
CW 50	2xNIDA Flam 12,5 + 1xNIDA Flam 15	2,10
CW 75	2xNIDA Flam 12,5 + 1xNIDA Flam 15	2,65
CW 100	2xNIDA Flam 12,5 + 1xNIDA Flam 15	3,00

* For partitions higher than 7.6m, please contact Siniat Tehnical Assistance

Average quantities for 1 m² of system 3 m high and 5 m long

The loss coefficient is not included in the table. This shall be determined by the constructor depending on the specificity of the project.

PRODUCTS	UM	QUANTITIES TRIPLE LINING	
		ϒ= 60cm	ϒ= 40cm
NIDA Flam 15 plasterboard	m²	1,00	1,00
NIDA Flam 12,5 plasterboard	m²	2,00	2,00
NIDA Metal UW profile	ml	0,70	0,80
NIDA Metal CW profile	ml	2,00	2,80
Steel angle	pcs.	0,70	1,00
Mechanical fixing (e.g. METAL DOWEL)*	pcs.	2,90	3,60
Self-tapping screw AF 212x25(1)	pcs.	6,00	8,00
Self-tapping screw AF 212x45(2)	pcs.	6,00	8,00
Self-tapping screw AF 212x55(3)	pcs.	12,00	16,00
Self-drilling screw AP 421x13	pcs.	6,00	9,00
Joint tape**	ml	2,00	2,00
NIDA Profesional jointing compound	kg	0,45	0,45
Sealing tape	ml	0,70	0,80
Mineral wool (optional)	m²	1,00	1,00
NIDA Boardfix***	kg	0,10	0,10

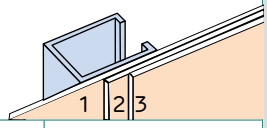

(1) The first layer of boards - from metal structure
(2) The second layer of boards - from metal structure
(3) The third layer of boards - from metal structure

*Mechanical fixing shall be selected by the specialized designer of the works, depending on the type of support (concrete, reinforced concrete, screeds, metal structures, wood...), maximum effective forces calculated in accordance with the law in force, the load bearing capacities of the selected fixing elements, as well as the mounting possibilities. In case of fire resistant systems, only steel connections shall be used;

**For fire resistant systems, glass wool is mandatory;

***For bonding sills on masonry, repairs and filling joints <5 mm.

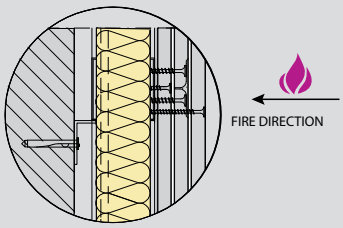

INSTALLATION

CROSS SECTION

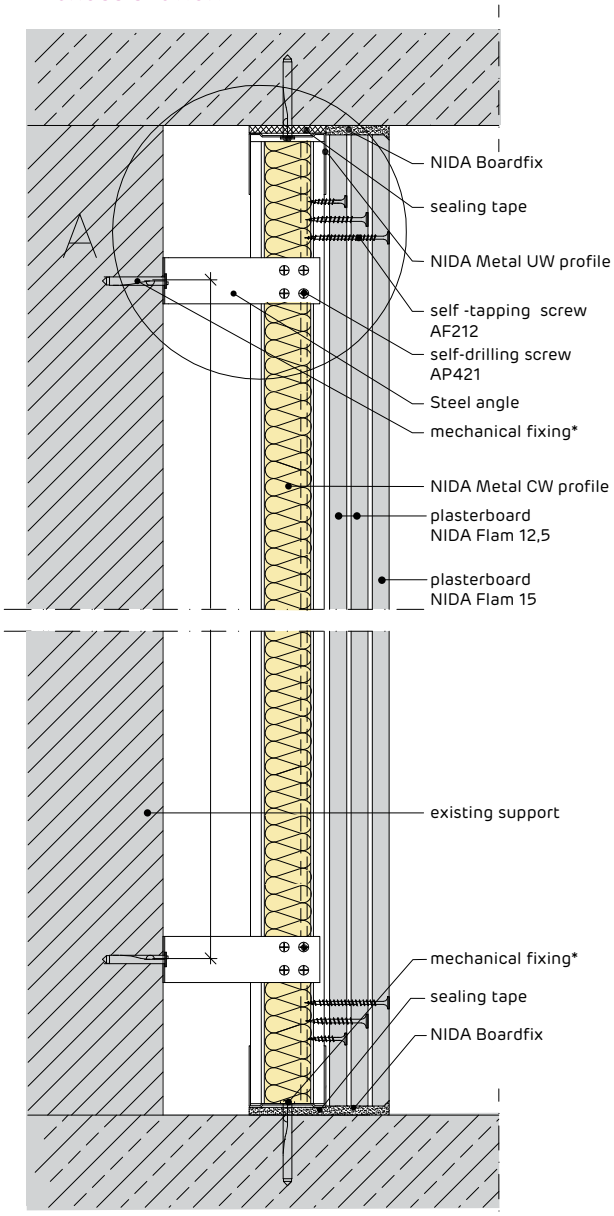

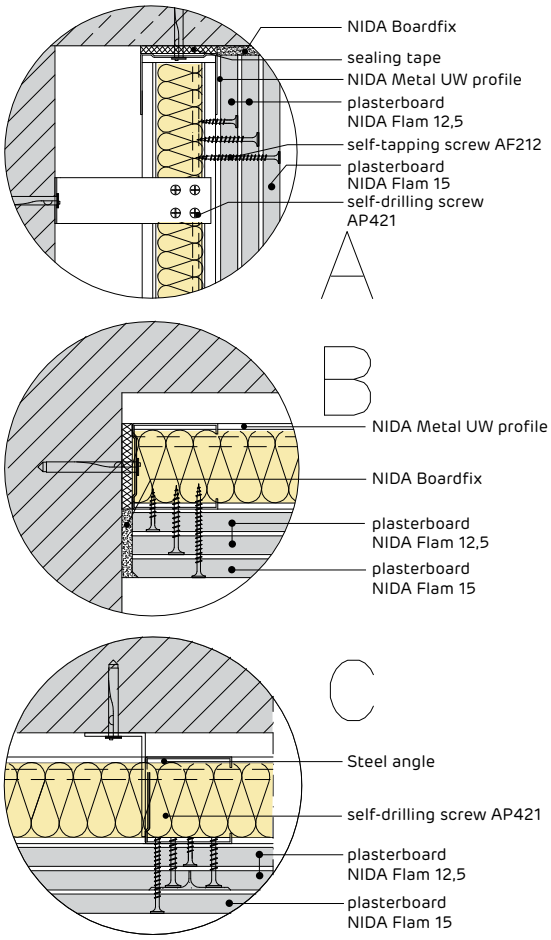

LONGITUDINAL SECTION
JOINT WITH MASSIVE WALL

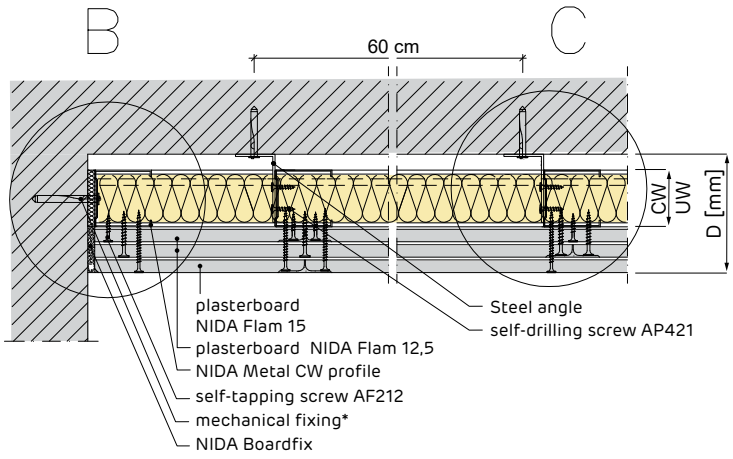

BOARDS STAGGERING

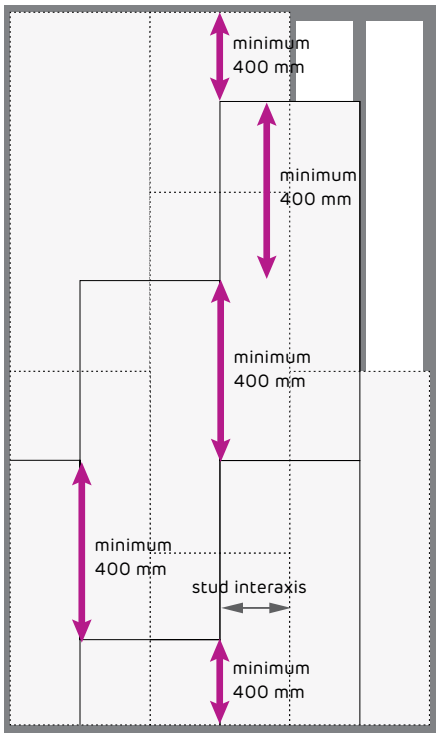

vertical positioning

* Horizontal and vertical joints should be staggered to avoid overlapping in case of multiple board layers

Lining EI120

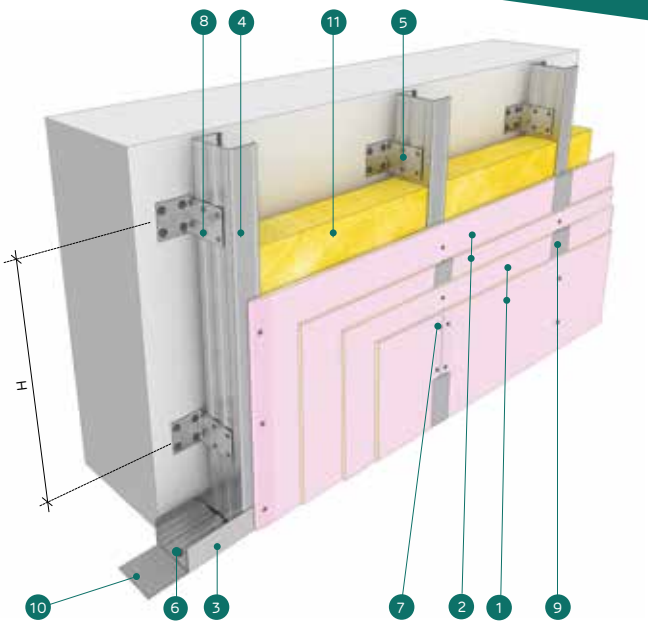

1. NIDA Flam 15 plasterboard
2. NIDA Flam 12,5 plasterboard
3. NIDA Metal UW profile
4. NIDA Metal CW profile
5. Steel angle
6. Mechanical fixing (e.g. METAL DOWEL)*
7. Self-tapping screw AF 212
8. Self-drilling screw AP 421
9. Jointing tape and jointing compound NIDA Profesional
10. Mono adhesive insulating tape NIDA System
11. Mineral wool (optional)

SYSTEM PRESENTATION

Metal structure: NIDA Metal UW&CW 50-75-100, thickness 0,60mm, NIDA Metal CD60

Type and number of plasterboards: 2xNIDA Flam 12,5 + 2xNIDA Flam 15

Mineral wool: optional, only for acoustical considerations

Weight: ≈60 kg/m²

PERFORMANCES

Profiles at interaxis of 60 cm	Number of NIDA plasterboards	Maximum distance between supporting elements H [m]
CW 50	2xNIDA Flam 12,5 + 2xNIDA Flam 15	2,10
CW 75	2xNIDA Flam 12,5 + 2xNIDA Flam 15	2,65
CW 100	2xNIDA Flam 12,5 + 2xNIDA Flam 15	3,00

* For partitions higher than 7.6m, please contact Siniat Tehnical Assistance

Average quantities for 1 m² of system 3 m high and 5 m long

The loss coefficient is not included in the table. This shall be determined by the constructor depending on the specificity of the project.

PRODUCTS	UM	QUANTITIES QUADRUPLE LINING	
		ℵ= 60cm	ℵ= 40cm
NIDA Flam 15 plasterboard	m²	2,00	2,00
NIDA Flam 12,5 plasterboard	m²	2,00	2,00
NIDA Metal UW profile	ml	0,70	0,80
NIDA Metal CW profile	ml	2,00	2,80
Steel angle	pcs.	0,70	1,00
Mechanical fixing (e.g. METAL DOWEL)*	pcs.	2,90	3,60
Self-tapping screw AF 212x25(1)	pcs.	6,00	8,00
Self-tapping screw AF 212x45(2)	pcs.	6,00	8,00
Self-tapping screw AF 212x55(3)	pcs.	6,00	8,00
Self-tapping screw AF 212x70(4)	pcs.	12,00	16,00
Self-drilling screw AP 421x13	pcs.	6,00	9,00
Joint tape**	ml	2,00	2,00
NIDA Profesional jointing compound	kg	0,50	0,50
Sealing tape	ml	0,70	0,80
Mineral wool (optional)	m²	1,00	1,00
NIDA Boardfix ***	kg	0,10	0,10

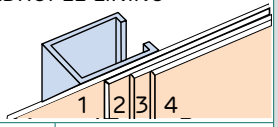

(1) The first layer of boards - from metal structure
(2) The second layer of boards - from metal structure
(3) The third layer of boards from metal structure(4)The fourth layer of boards - from metal structure

*Mechanical fixing shall be selected by the specialized designer of the works, depending on the type of support (concrete, reinforced concrete, screeds, metal structures, wood...), maximum effective forces calculated in accordance with the law in force, the load bearing capacities of the selected fixing elements, as well as the mounting possibilities. In case of fire resistant systems, only steel connections shall be used;

**For fire resistant systems, glass wool is mandatory;

***For bonding sills on masonry, repairs and filling joints <5 mm.

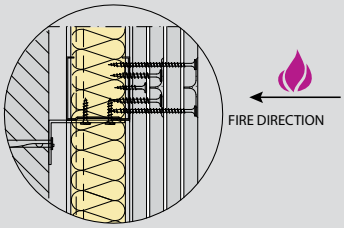

INSTALLATION

CROSS SECTION

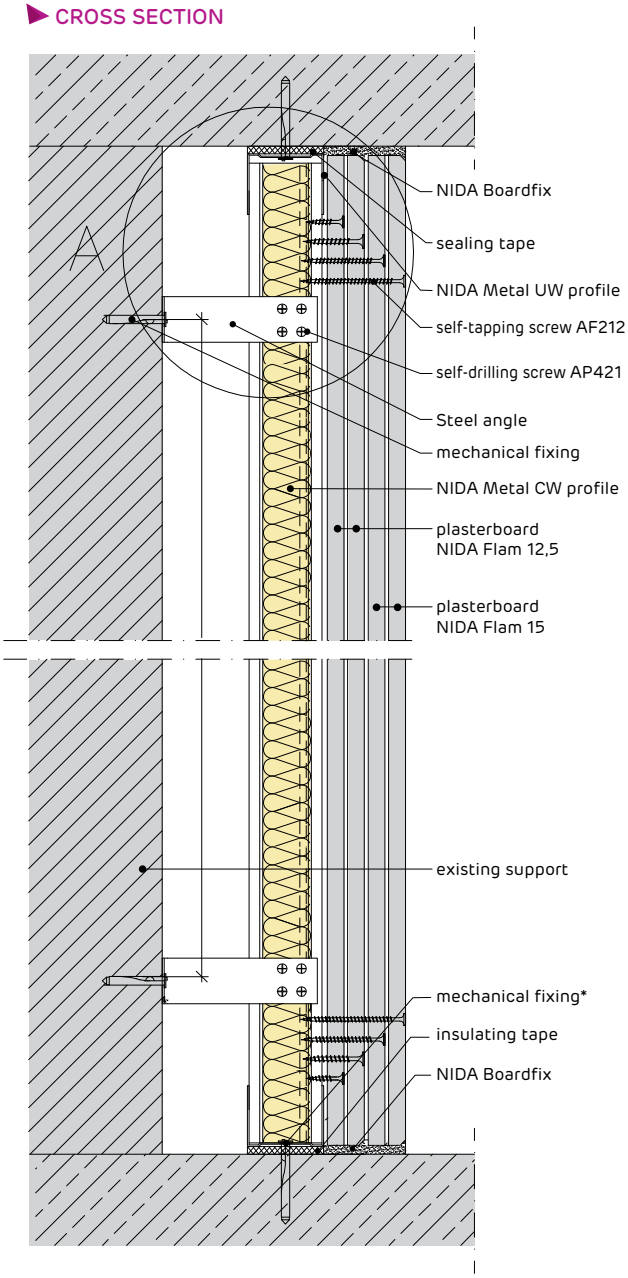

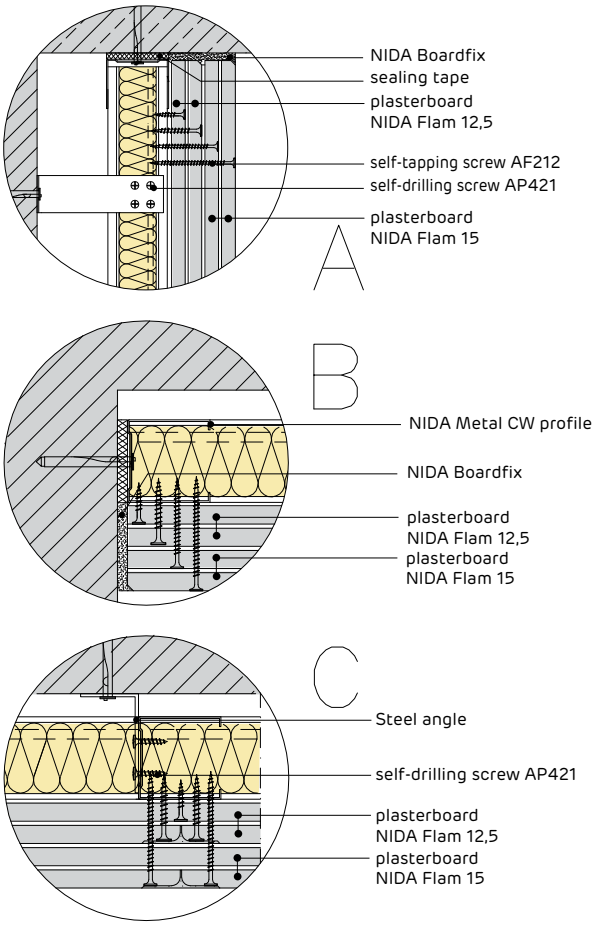

LONGITUDINAL SECTION
JOINT WITH MASSIVE WALL

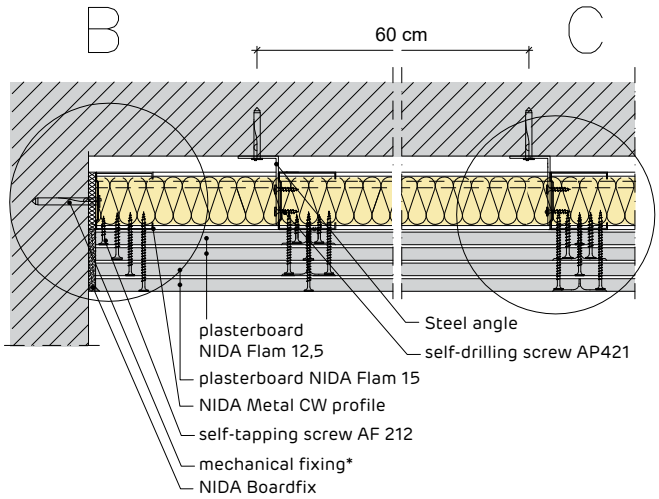

BOARDS STAGGERING

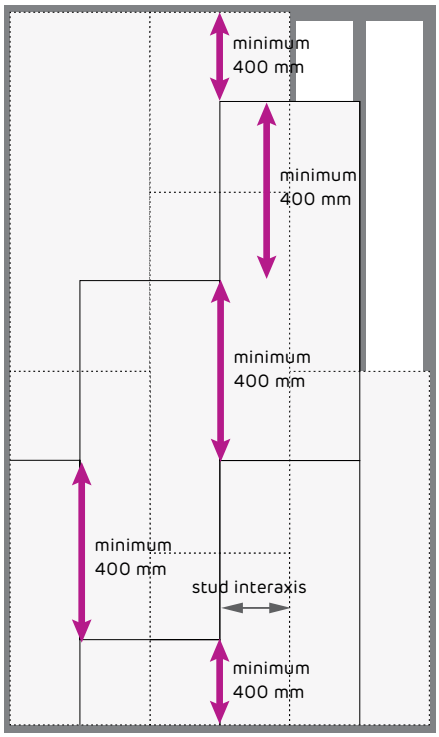

vertical positioning

* Horizontal and vertical joints should be staggered to avoid overlapping in case of multiple board layers

MINISTERUL DEZVOLTARII REGIONALE SI DEZVOLTARII REGIONALE
CONSILIUL TEHNIC PERMANENT PENTRU CONSTRUCŢII

Agrement Tehnic 017-03/151-2015

PROCEDEU DE REALIZARE A PLAFOANELOR DIN GIPS CARTON REZISTENTE LA FOC NIDA SYSTEM

FIRE RESISTANT CEILINGS OF TYPE NIDA SYSTEM

PLAFONDS COUPE FEU TYPE NIDA SYSTEM

PRODUCĂTOR:	*SC SINIAT SA* *Str. Drumul Leordeni nr. 106, sector 4, Bucuresti* *Tel. : 021.3075324, Fax: 021.3075373*
TITULAR AGREMENT TEHNIC:	*SC SINIAT SA* *Str. Drumul Leordeni nr. 106, sector 4, Bucuresti* *Tel. : 021.3075324, Fax: 021.3075373*
ELABORATOR AGREMENT TEHNIC:	*INSTITUTUL EUROPEAN PENTRU STIINTE TERMICE* *Bd. Pache Protopopescu nr. 66, Sector 2* *Bucureşti – ROMANIA*

***Grupa specializata nr. 3**: Protecţii la foc – termotehnică – acustică – protecţii hidrofuge şi învelitori*

Prezentul agrement tehnic este valabil până la data de 31.01.2018 numai însoţit de AVIZUL TEHNIC al Consiliului Tehnic Permanent pentru Construcţii şi nu ţine loc de certificat de calitate

Ceilings

Ceiling EI30 plenum 6,5-12,5 cm

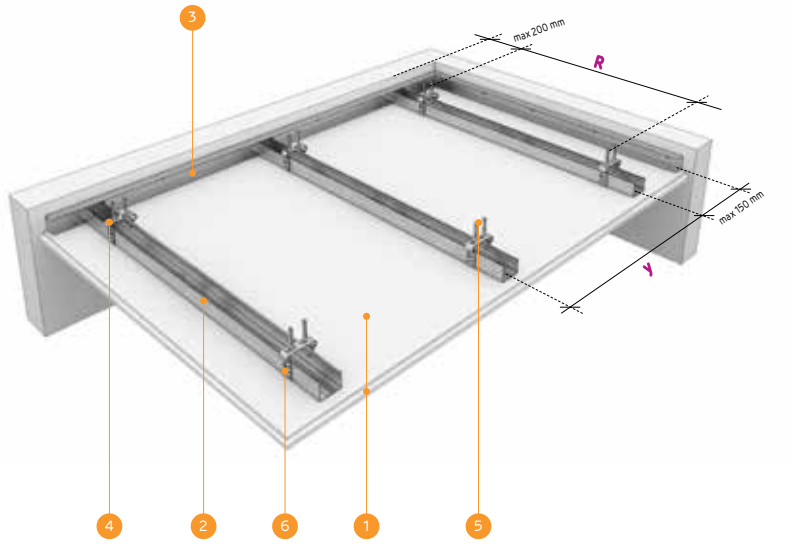

1. NIDA Standard 12,5 plasterboard
2. NIDA Metal CD 60 profile
3. NIDA Metal UD 30 profile
4. NIDA System adjustable bracket
5. Mechanical fixing (e.g. METAL DOWEL)*
6. Self-drilling screw AP 421

SYSTEM PRESENTATION

- Metal structure: NIDA Metal CD60 / UD30 thickness 0,60mm
- Type and number of plasterboards: 2xNIDA Standard 12,5
- Mineral wool: optional, only for acoustical considerations
- Weight: ≈25kg/m²

PERFORMANCES

NIDA Metal Profile	Loading class [daN/m²]	Number of NIDA plasterboards	Interaxis	
			Adjustable bracket R [cm]	Metal profile y [cm]
CD 60	15	2xNIDA Standard 12,5	100	40

Average quantities for 1 m² of 3m wide and 5 m long system

The loss coefficient is not included in the table. This shall be determined by the constructor depending on the specificity of the project.

PRODUCTS	UM	QUANTITIES DOUBLE LINING SYSTEM
NIDA Standard 12,5 plasterboard	m²	2,00
NIDA Metal CD60 profile	ml	2,70
NIDA Metal UD30 profile	ml	0,60
Connector for CD60	pcs.	0,90
NIDA System adjustable bracket	pcs.	2,70
Mechanical fixing (e.g. METAL DOWEL)*	pcs.	3,90
Self-tapping screw AF 212x25(1)	pcs.	6,00
Self-tapping screw AF 212x45(2)	pcs.	12,00
Self-drilling screw AP 421x13	pcs.	12,00
Joint tape**	ml	2,00
NIDA Profesional jointing compound	kg	0,30
Mono-adhesive insulating tape	ml	0,60
Mineral wool (optional)***	m²	1,00

In case of ceilings, the plasterboards should be installed perpendicular, not along the structure.

(1) The first layer of boards - from metal structure
(2) The second layer of boards - from metal structure

*Mechanical fixing shall be selected by the specialized designer of the works, depending on the type of support (concrete, reinforced concrete, screeds, metal structures, wood...), maximum effective forces calculated in accordance with the law in force, the load bearing capacities of the selected fixing elements, as well as the mounting possibilities.Use only metal connectors for fire resistant systems. It is recommended that the mechanical fixing, as well as the load supported to be 1/3 of the load declared by the manufacturer of the fixing.

**For fire or humidity resistant systems, fiber glsas felting should be used;

***Mineral wool shall be used in the ceiling only for acoustical considerations and shall be considered as additional weight to the ceiling.

For other fixing interaxis, please refer to the TECHNICAL CATALOGUE Edition 2015

INSTALLATION

BOARDS STAGGERING

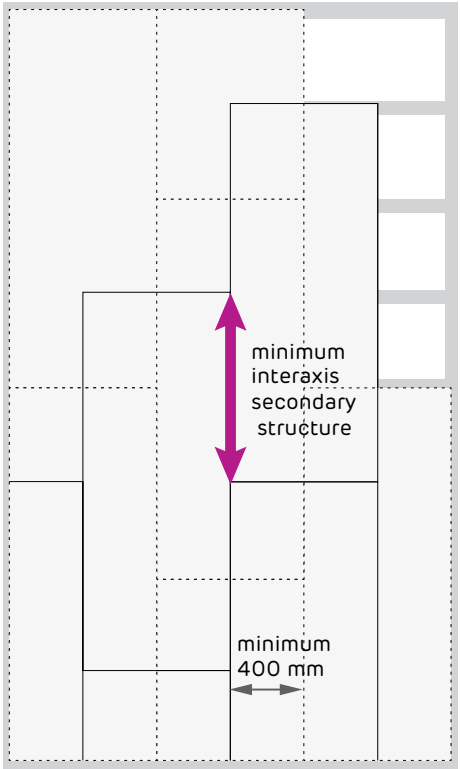

* Horizontal and vertical joints should be staggered to avoid overlapping in case of multiple board layers

JOINT WITH MASSIVE WALL CROSS SECTION

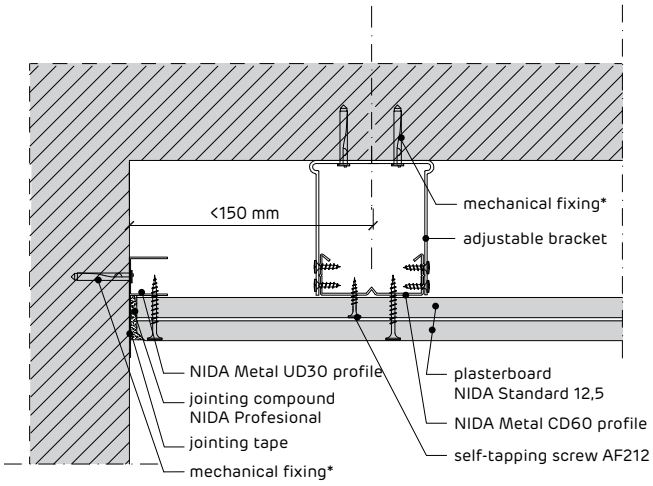

LONGITUDINAL SECTION, SLIDING JOINT

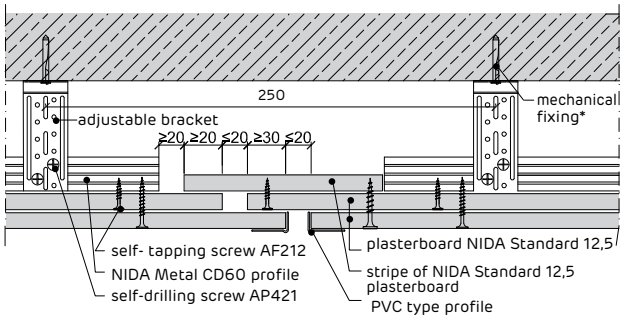

CROSS SECTION

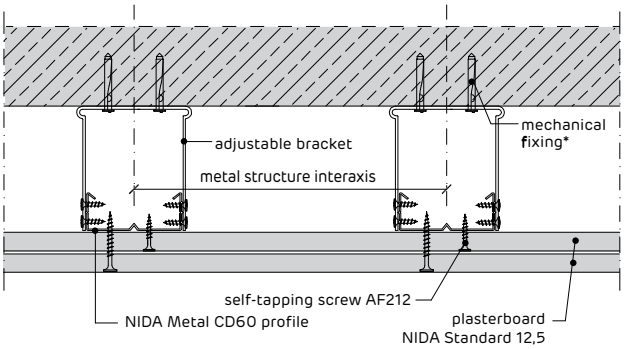

JOINT WITH PLASTERBOARD PARTITION; CROSS SECTION

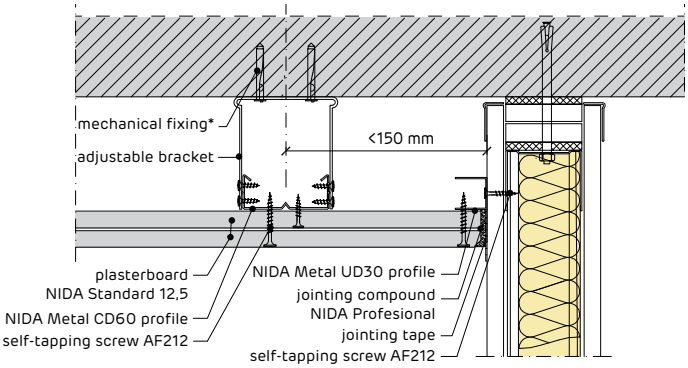

LONGITUDINAL SECTION. JOINT WITH MASSIVE PARTITION

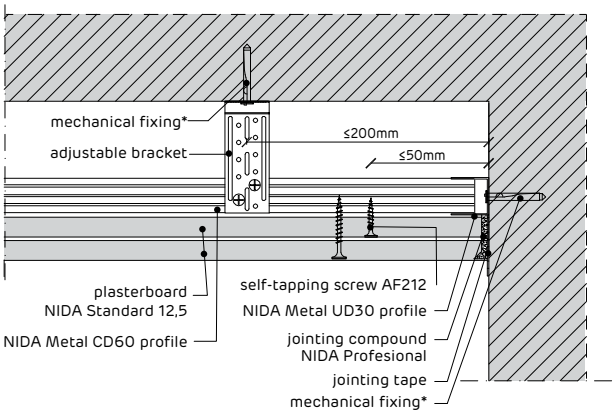

Ceiling EI 30 plenum >19,5 cm

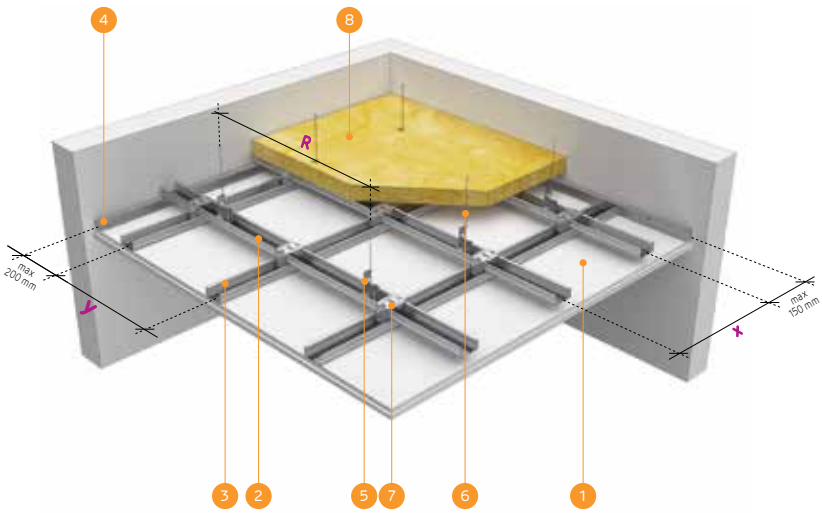

1. NIDA Standard 12,5 plasterboard
2. NIDA Metal CD60 main profile
3. NIDA Metal CD60 secondary profile
4. NIDA Metal UD30 profile
5. Hanger CD60
6. Steel rod
7. Cross connection bracket CD60
8. Mineral wool (optional)

SYSTEM PRESENTATION

- Metal structure: NIDA Metal CD60 / UD30 thickness 0,60mm
- Type and number of plasterboards: 2xNIDA Standard 12,5
- Mineral wool: optional, only for acoustical considerations
- Weight: ≈25kg/m²

PERFORMANCES

NIDA Metal Profile	Loading class [daN/m²]	Number of NIDA plasterboards	Joint type		Interaxis		
			Simple	Double	Hanger CD60 R [cm]	Main metal profile x [cm]	Secondary metal profile y [cm]
CD 60	15	2xNIDA Standard 12,5	-	x	50	100	40
			-	x	100	45	40
			-	x	120	30	40
			x	x	90	50	40
			x	x	100	40	40

Average quantities for 1 m² of 3m wide and 5 m long system

The loss coefficient is not included in the table. This shall be determined by the constructor depending on the specificity of the project.

PRODUCTS	UM	QUANTITIES DOUBLE LINING SYSTEM
NIDA Standard 12.5 plasterboard	m²	2,00
NIDA Metal CD60 profile	ml	4,10
NIDA Metal UD30 profile	ml	0,60
Connector for CD60	pcs.	0,80
Suspension Hanger CD60	pcs.	2,80
Steel rod	pcs.	2,80
Cross connection bracket CD60	pcs.	2,50
Mechanical fixing (e.g. METAL DOWEL)*	pcs.	3,40
Self-tapping screw AF 212x25(1)	pcs.	6,00
Self-tapping screw AF 212x45(2)	pcs.	12,00
Self-drilling screw AP 421x13	pcs.	12,00
Joint tape**	ml	2,00
NIDA Profesional jointing compound	kg	0,30
Mono-adhesive insulating tape	ml	0,60
Mineral wool (optional)***	m²	1,00

In case of ceilings, the plasterboards should be installed perpendicular, not along the structure.

(1) The first layer of boards - from metal structure
(2) The second layer of boards - from metal structure

*Mechanical fixing shall be selected by the specialized designer of the works, depending on the type of support (concrete, reinforced concrete, screeds, metal structures, wood...), maximum effective forces calculated in accordance with the law in force, the load bearing capacities of the selected fixing elements, as well as the mounting possibilities.Use only metal connectors for fire resistant systems It is recommended that the mechanical fixing, as well as the load supported to be 1/3 of the load declared by the manufacturer of the fixing.

**For fire or humidity resistant systems, fiber glsas felting should be used;

***Mineral wool shall be used in the ceiling only for acoustical considerations and shall be considered as additional weight to the ceiling.

For other fixing interaxis, please refer to the TECHNICAL CATALOGUE Edition 2015

INSTALLATION

BOARDS STAGGERING

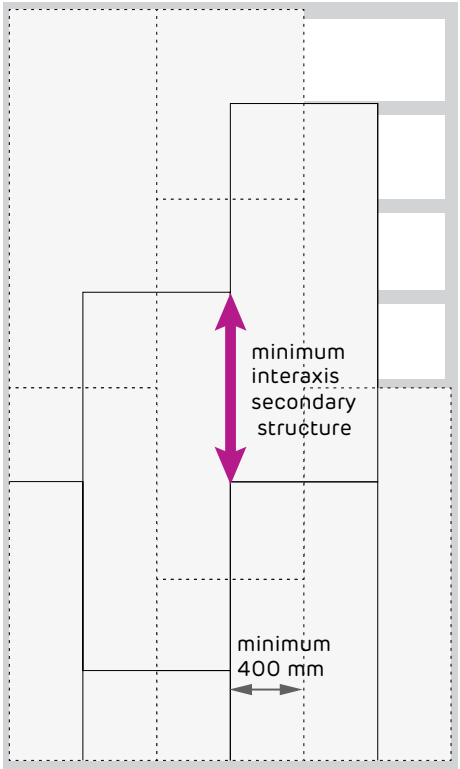

* Horizontal and vertical joints should be staggered to avoid overlapping in case of multiple linings

JOINT WITH MASSIVE WALL CROSS SECTION

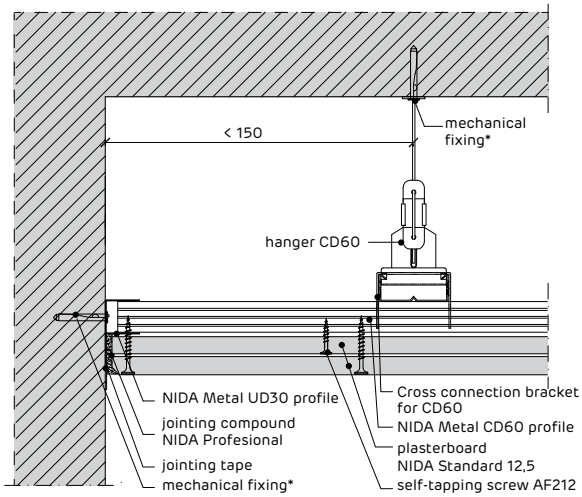

LONGITUDINAL SECTION, SLIDING JOINT

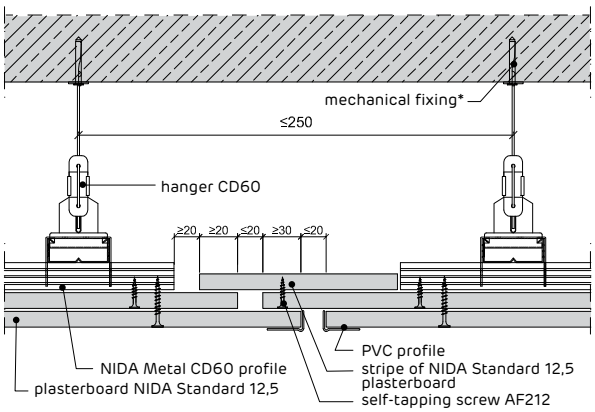

CROSS SECTION

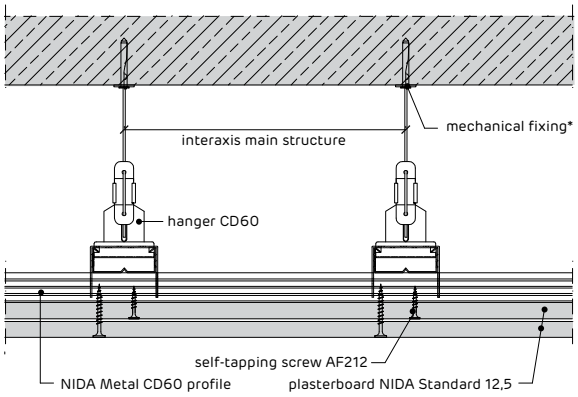

JOINT WITH PLASTERBOARD PARTITION; CROSS SECTION

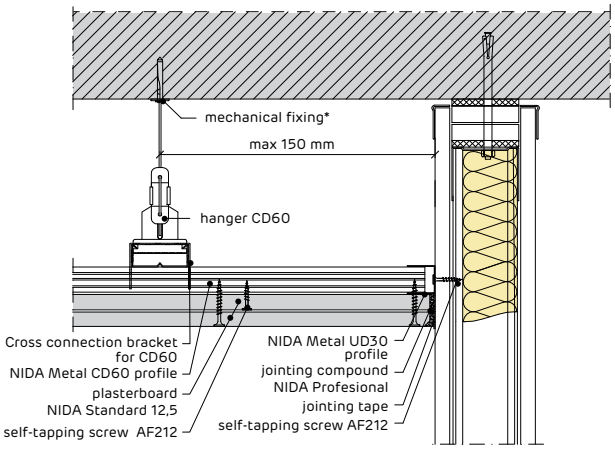

LONGITUDINAL SECTION. JOINT WITH MASSIVE WALL

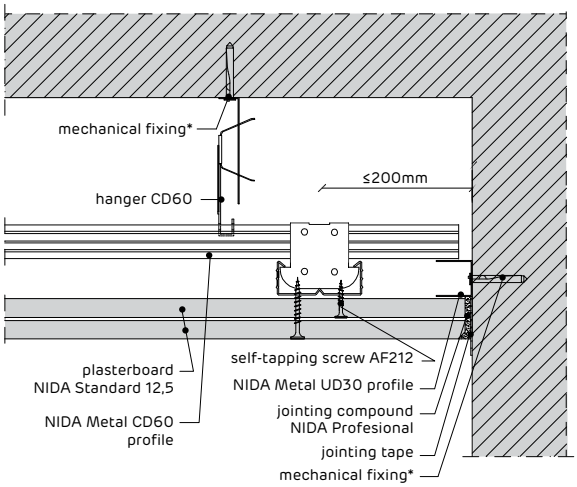

Ceiling EI 30 plenum >25 cm

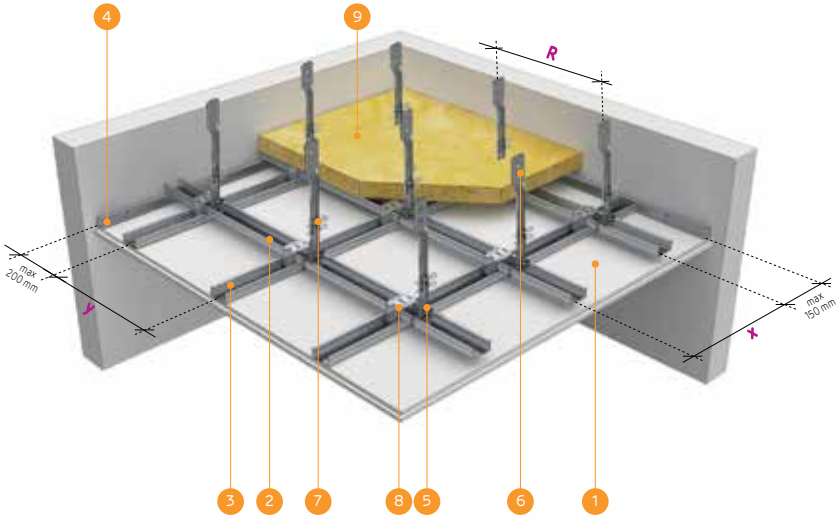

1. NIDA Standard 12,5 plasterboard
2. NIDA Metal CD60 main profile
3. NIDA Metal CD60 secondary profile
4. NIDA Metal UD30 profile
5. Lower NONIUS Hanger CD60
6. Upper NONIUS Hanger CD60
7. NONIUS clamp
8. Cross connection bracket CD60
9. Mineral wool

SYSTEM PRESENTATION

- Metal structure: NIDA Metal CD60 / UD30 thickness 0,60mm
- Type and number of plasterboards: 2xNIDA Standard 12,5
- Mineral wool: optional, only for acoustical considerations
- Weight: ≈25 kg/m²

PERFORMANCES

NIDA Metal Profile	Loading class [daN/m²]	Number of NIDA plasterboards	Joint type		Interaxis		
			Simple	Double	NONIUS Hanger CD60 R [cm]	Main metal profile x [cm]	Secondary metal profile y [cm]
CD 60	15	2xNIDA Standard 12,5	-	x	65	100	40
			-	x	100	40	40
			-	x	120	30	40
			x	x	90	50	40

Average quantities for 1 m² of 3m wide and 5 m long system

The loss coefficient is not included in the table. This shall be determined by the constructor depending on the specificity of the project.

PRODUCTS	UM	QUANTITIES DOUBLE LINING SYSTEM
NIDA Standard 12,5 plasterboard	m²	2,00
NIDA Metal CD60 profile	ml	4,10
NIDA Metal UD30 profile	ml	0,60
Connector for CD60	pcs.	0,80
Upper NONIUS Hanger CD60	pcs.	2,20
Lower NONIUS Hanger CD60	pcs.	2,20
NONIUS clamp (2 pcs/package)	pcs.	4,40
Cross connection bracket CD60	pcs.	2,50
Mechanical fixing (e.g. METAL DOWEL)*	pcs.	3,40
Self-tapping screw AF 212x25(1)	pcs.	6,00
Self-tapping screw AF 212x45(2)	pcs.	12,00
Self-drilling screw AP 421x13	pcs.	12,00
Joint tape**	ml	2,00
NIDA Profesional jointing compound	kg	0,30
Mono-adhesive insulating tape	ml	0,60
Mineral wool (optional)***	m²	1,00

In case of ceilings, the plasterboards should be installed perpendicular, not along the structure.

(1) The first layer of boards - from metal structure
(2) The second layer of boards - from metal structure

*Mechanical fixing shall be selected by the specialized designer of the works, depending on the type of support (concrete, reinforced concrete, screeds, metal structures, wood...), maximum effective forces calculated in accordance with the law in force, the load bearing capacities of the selected fixing elements, as well as the mounting possibilities.Use only metal connectors for fire resistant systems
It is recommended that the mechanical fixing, as well as the load supported to be 1/3 of the load declared by the manufacturer of the fixing.

**For fire or humidity resistant systems, fiber glsas felting should be used;

***Mineral wool shall be used in the ceiling only for acoustical considerations and shall be considered as additional weight to the ceiling.

For other fixing interaxis, please refer to the TECHNICAL CATALOGUE Edition 2015

INSTALLATION

BOARDS STAGGERING

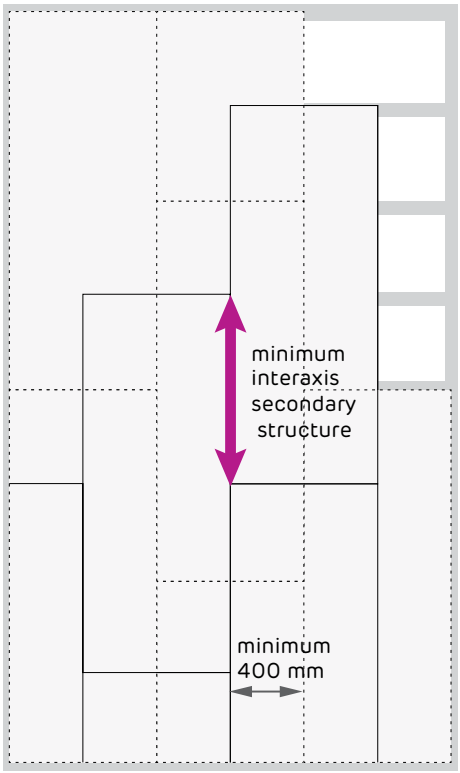

* Horizontal and vertical joints should be staggered to avoid overlapping in case of multiple linings

JOINT WITH MASSIVE WALL CROSS SECTION

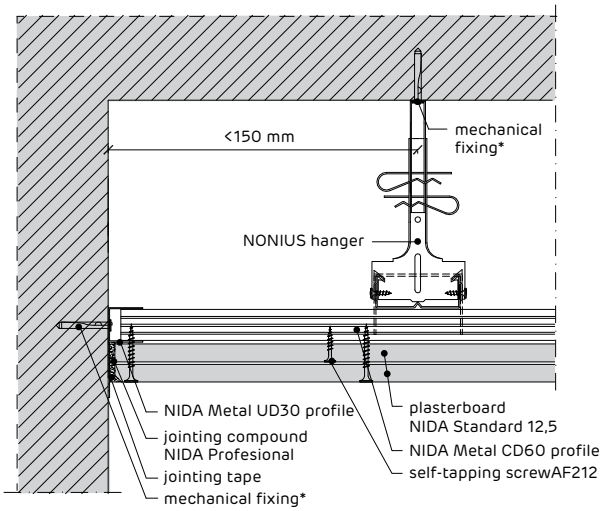

LONGITUDINAL SECTION, SLIDING JOINT

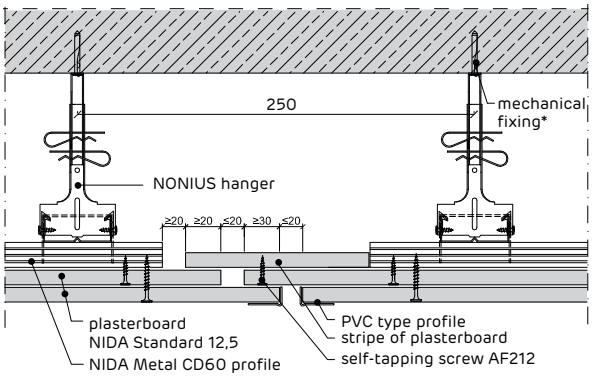

CROSS SECTION

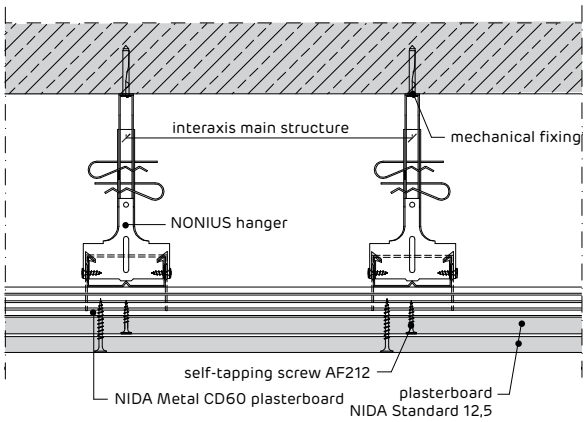

JOINT WITH PLASTERBOARD PARTITION; CROSS SECTION

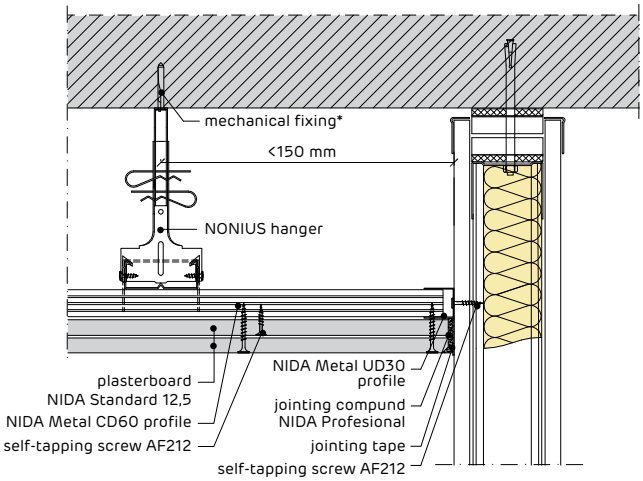

LONGITUDINAL SECTION. JOINT WITH MASSIVE WALL

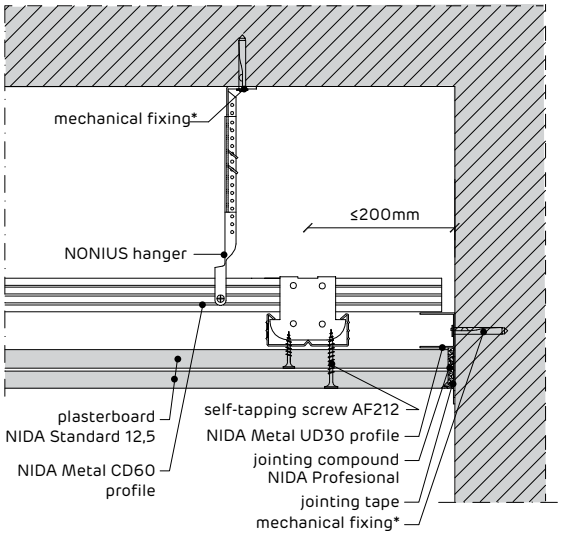

Ceiling EI45 plenum 6,5-12,5 cm

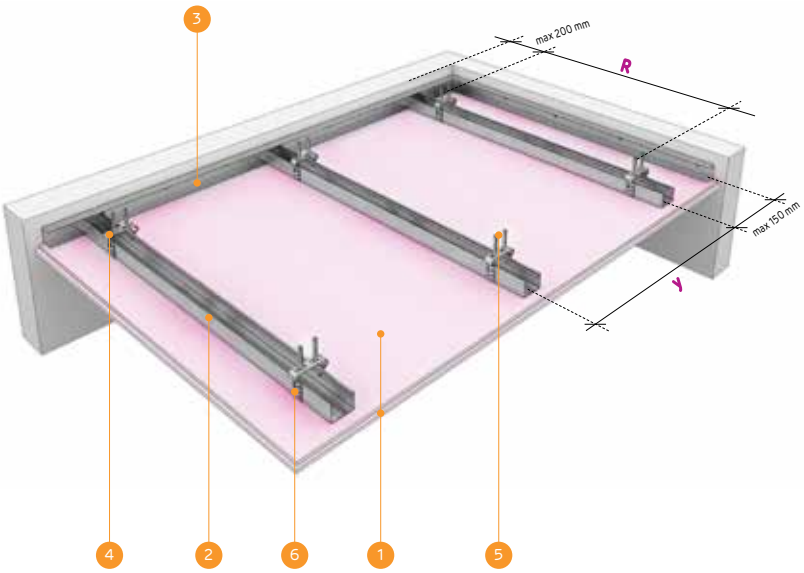

1. NIDA Flam 12,5 plasterboard
2. NIDA Metal CD60 profile
3. NIDA Metal UD30 profile
4. NIDA System adjustable bracket
5. Mechanical fixing (e.g. METAL DOWEL)*
6. Self-drilling screw AP421

SYSTEM PRESENTATION

- Metal structure: NIDA Metal CD60 / UD30 thickness 0,60mm
- Type and number of plasterboards: 2xNIDA Flam 12,5
- Mineral wool: optional, only for acoustical considerations
- Weight: ≈30 kg/m²

PERFORMANCES

NIDA Metal Profile	Loading class [daN/m²]	Number of NIDA plasterboards	Interaxis	
			Adjustable bracket R [cm]	Metal profile y [cm]
CD 60	15	2xNIDA Flam 12,5	100	40

Average quantities for 1 m² of 3m wide and 5 m long system

The loss coefficient is not included in the table. This shall be determined by the constructor depending on the specificity of the project.

PRODUCTS	UM	QUANTITIES DOUBLE LINING SYSTEM
NIDA Flam 12,5 plasterboard	m²	2,00
NIDA Metal CD60 profile	ml	2,70
NIDA Metal UD30 profile	ml	0,60
Connector for CD60	pcs.	0,90
NIDA System adjustable bracket	pcs.	2,70
Mechanical fixing (e.g. METAL DOWEL)*	pcs.	3,90
Self-tapping screw AF 212x25(1)	pcs.	6,00
Self-tapping screw AF 212x45(2)	pcs.	12,00
Self-drilling screw AP 421x13	pcs.	12,00
Joint tape**	ml	2,00
NIDA Profesional jointing compound	kg	0,30
Mono-adhesive insulating tape	ml	0,60
Mineral wool (optional)***	m²	1,00

In case of ceilings, the plasterboards should be installed perpendicular, not along the structure.

(1) The first layer of boards - from metal structure
(2) The second layer of boards - from metal structure

*Mechanical fixing shall be selected by the specialized designer of the works, depending on the type of support (concrete, reinforced concrete, screeds, metal structures, wood...), maximum effective forces calculated in accordance with the law in force, the load bearing capacities of the selected fixing elements, as well as the mounting possibilities.Use only metal connectors for fire resistant systems It is recommended that the mechanical fixing, as well as the load supported to be 1/3 of the load declared by the manufacturer of the fixing.

**For fire or humidity resistant systems, fiber glsas felting should be used;

***Mineral wool se va dispune în cadrul Ceilingului only for acoustical considerations și va fi considerată ca Weight suplimentară adusă Ceilingului.

For other fixing interaxis, please refer to the TECHNICAL CATALOGUE Edition 2015

INSTALLATION

BOARDS STAGGERING

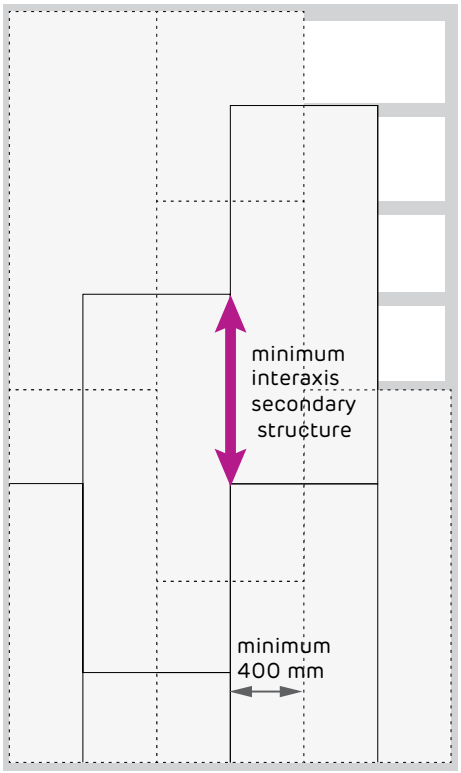

* Horizontal and vertical joints should be staggered to avoid overlapping in case of multiple linings

JOINT WITH MASSIVE WALL CROSS SECTION

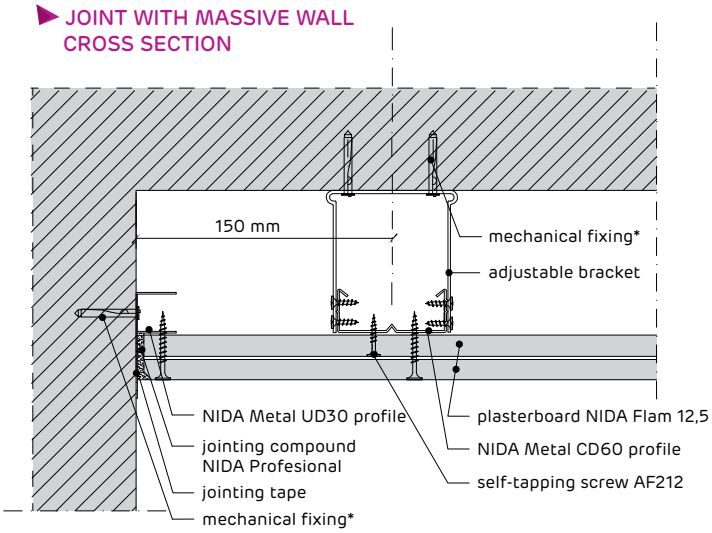

LONGITUDINAL SECTION, SLIDING JOINT

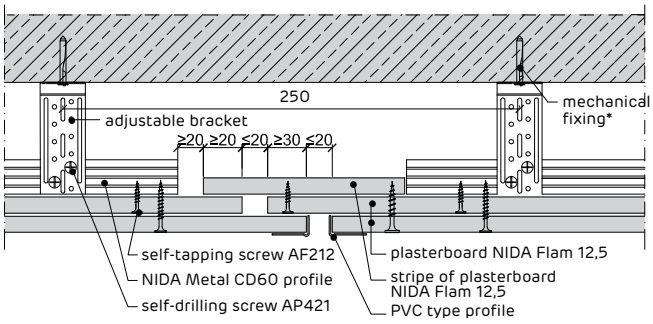

CROSS SECTION

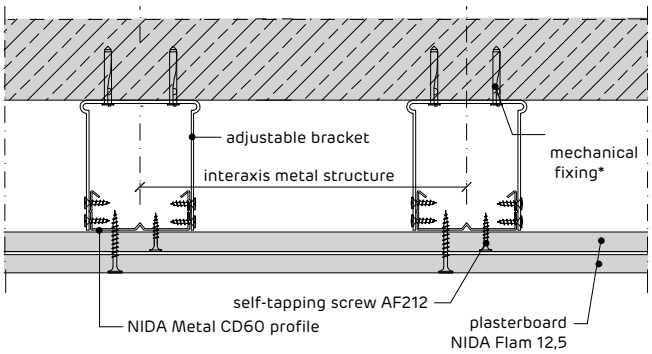

JOINT WITH PLASTERBOARD PARTITION; CROSS SECTION

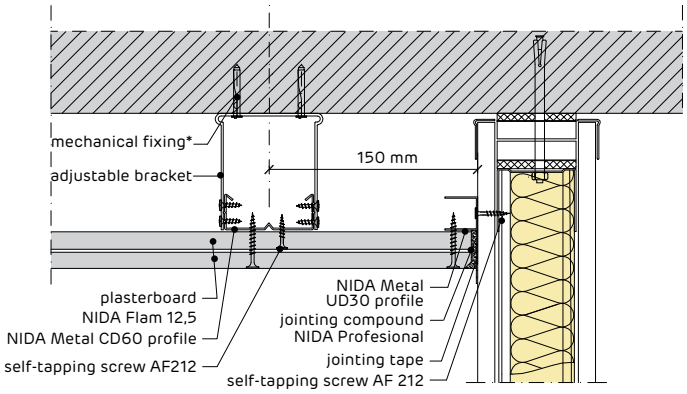

LONGITUDINAL SECTION. JOINT WITH MASSIVE WALL

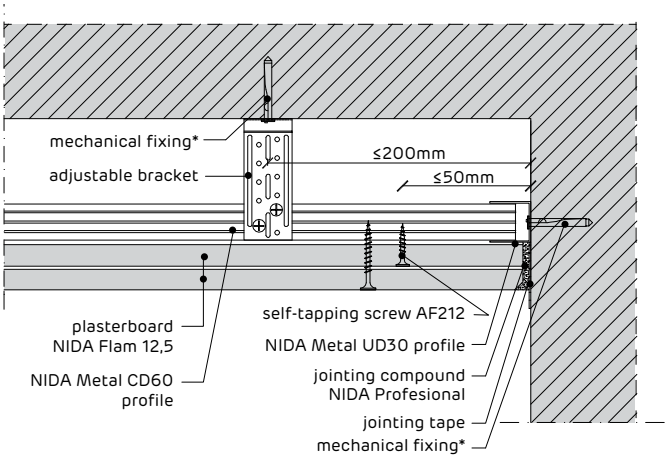

Ceiling EI 45 plenum >19,5 cm

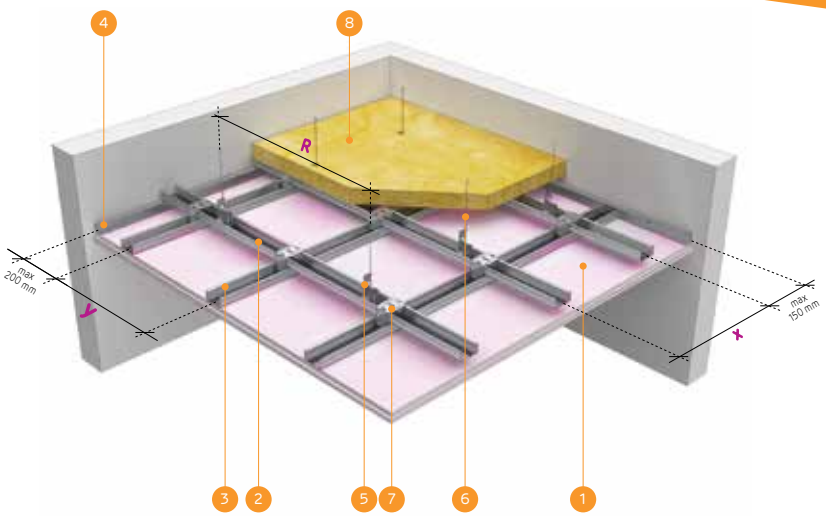

1. NIDA Flam 12,5 plasterboard
2. NIDA Metal CD60 main profile
3. NIDA Metal CD60 secondary profile
4. NIDA Metal UD30 profile
5. Hanger CD60
6. Steel rod
7. Cross connection bracket CD60
8. Mineral wool (optional)

SYSTEM PRESENTATION

- Metal structure: NIDA Metal CD60 / UD30 thickness 0,60mm
- Type and number of plasterboards: 2xNIDA Flam 12,5
- Mineral wool: optional, only for acoustical considerations
- Weight: ≈30 kg/m²

PERFORMANCES

SYSTEM TYPE	NIDA Metal Profile	Loading class [daN/m²]	Number of NIDA plasterboards	Joint type		Interaxis		
				Simple	Double	Hanger CD60 R [cm]	Main metal profile x [cm]	Secondary metal profile y [cm]
1	CD 60	15	2xNIDA Flam 12,5	-	x	50	100	40
2				-	x	100	45	40
3				-	x	120	30	40
4				x	x	90	50	40
5				x	x	100	40	40

Average quantities for 1 m² of 3m wide and 5 m long system

The loss coefficient is not included in the table. This shall be determined by the constructor depending on the specificity of the project.

PRODUCTS	UM	QUANTITIES DOUBLE LINING SYSTEM
NIDA Flam 12,5 plasterboard	m²	2,00
NIDA Metal CD60 profile	ml	4,10
NIDA Metal UD30 profile	ml	0,60
Connector for CD60	pcs.	0,80
Suspension Hanger CD60	pcs.	2,80
Steel rod	pcs.	2,80
Cross connection bracket CD60	pcs.	2,50
Mechanical fixing (e.g. METAL DOWEL)*	pcs.	3,40
Self-tapping screw AF 212x25(1)	pcs.	6,00
Self-tapping screw AF 212x45(2)	pcs.	12,00
Self-drilling screw AP 421x13	pcs.	12,00
Joint tape**	ml	2,00
NIDA Profesional jointing compound	kg	0,30
Mono-adhesive insulating tape	ml	0,60
Mineral wool (optional)***	m²	1,00

In case of ceilings, the plasterboards should be installed perpendicular, not along the structure.

(1) The first layer of boards - from metal structure
(2) The second layer of boards - from metal structure

*Mechanical fixing shall be selected by the specialized designer of the works, depending on the type of support (concrete, reinforced concrete, screeds, metal structures, wood...), maximum effective forces calculated in accordance with the law in force, the load bearing capacities of the selected fixing elements, as well as the mounting possibilities.Use only metal connectors for fire resistant systems It is recommended that the mechanical fixing, as well as the load supported to be 1/3 of the load declared by the manufacturer of the fixing.

**For fire or humidity resistant systems, fiber glsas felting should be used;

***Mineral wool shall be used in the ceiling only for acoustical considerations and shall be considered as additional weight to the ceiling.

For other fixing interaxis, please refer to the TECHNICAL CATALOGUE Edition 2015

INSTALLATION

JOINT WITH MASSIVE WALL CROSS SECTION

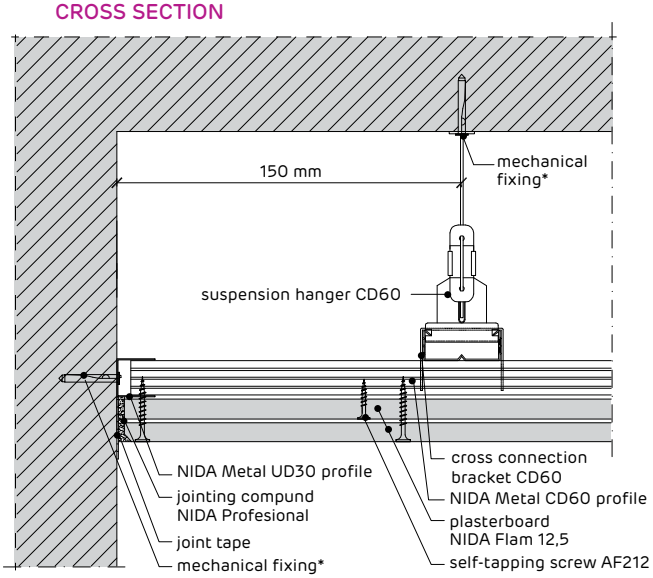

BOARDS STAGGERING

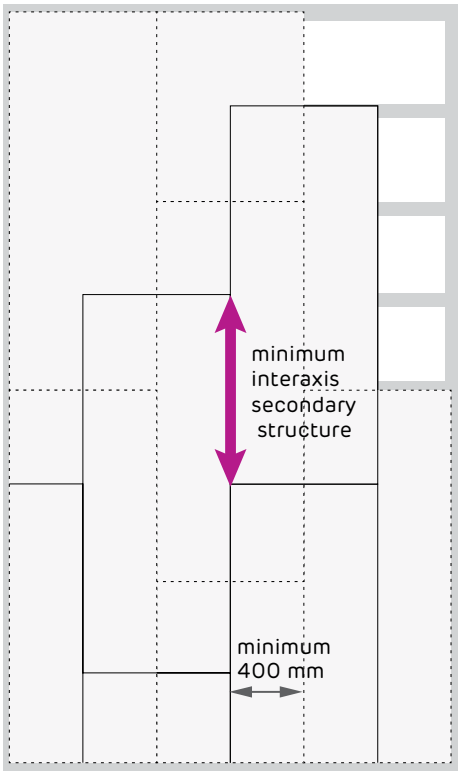

* Horizontal and vertical joints should be staggered to avoid overlapping in case of multiple linings

LONGITUDINAL SECTION, SLIDING JOINT

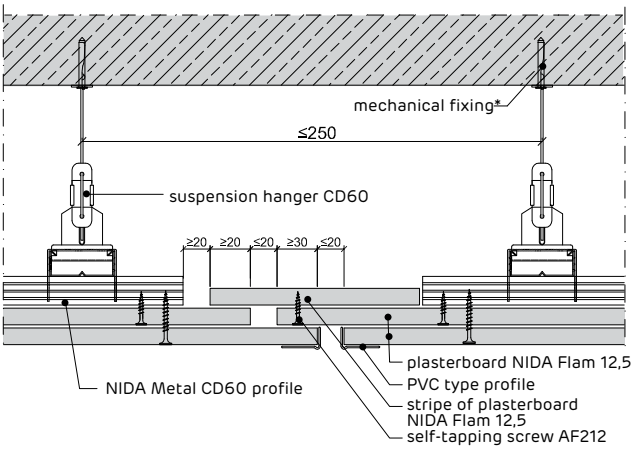

CROSS SECTION

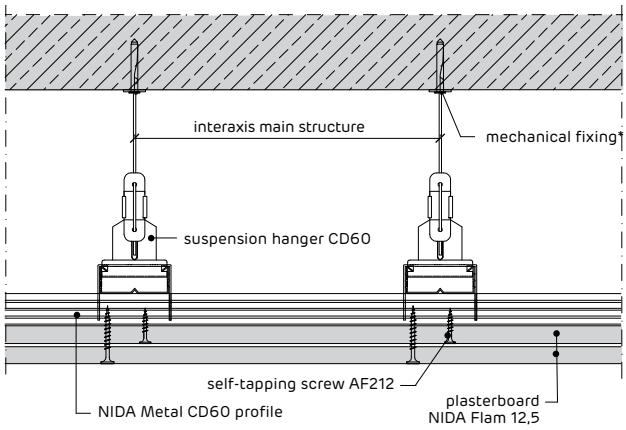

JOINT WITH PLASTERBOARD PARTITION; CROSS SECTION

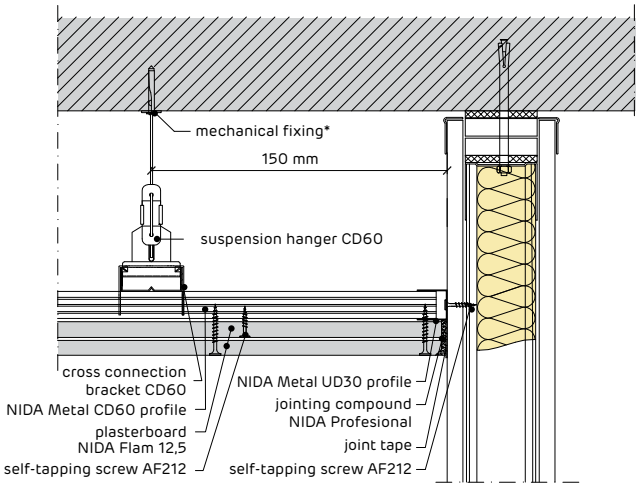

LONGITUDINAL SECTION. JOINT WITH MASSIVE WALL

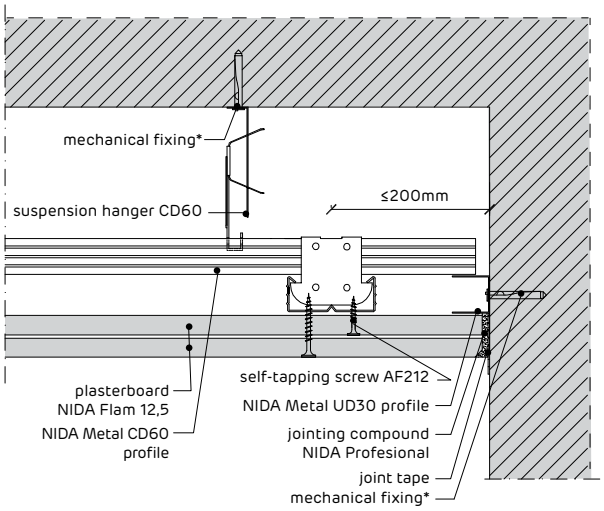

Ceiling EI 45 plenum >25 cm

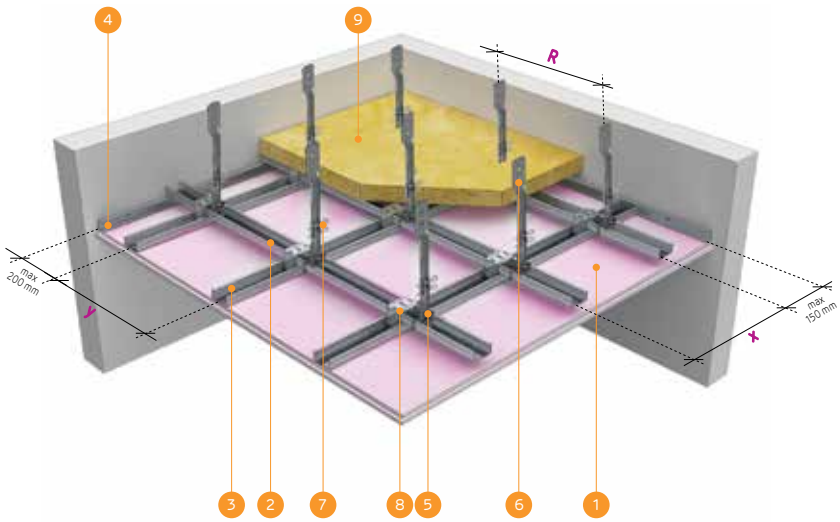

1. NIDA Flam 12,5 plasterboard
2. NIDA Metal CD60 main profile
3. NIDA Metal CD60 secondary profile
4. NIDA Metal UD30 profile
5. Lower NONIUS Hanger CD60
6. Upper NONIUS Hanger CD60
7. NONIUS clamp
8. Cross connection bracket CD60
9. Mineral wool

SYSTEM PRESENTATION

- Metal structure: NIDA Metal CD60 / UD30, thickness 0,60mm
- Type and number of plasterboards: 2xNIDA Flam 12,5
- Mineral wool: optional, only for acoustical considerations
- Weight: ≈30 kg/m²

PERFORMANCES

NIDA Metal Profile	Loading class [daN/m²]	Number of NIDA plasterboards	Joint type		Interaxis		
			Simple	Double	NONIUS Hanger CD60 R [cm]	Main metal profile x [cm]	Secondary metal profile y [cm]
CD 60	15	2xNIDA Flam 12,5	-	x	65	100	40
			-	x	100	40	40
			x	x	90	50	40

Average quantities for 1 m² of system 3 m high and 5 m long

The loss coefficient is not included in the table. This shall be determined by the constructor depending on the specificity of the project.

PRODUCTS	UM	QUANTITIES DOUBLE LINING SYSTEM
NIDA Flam 12,5 plasterboard	m²	2,00
NIDA Metal CD60 profile	ml	4,10
NIDA Metal UD30 profile	ml	0,60
Connector for CD60	pcs.	0,80
Upper NONIUS Hanger CD60	pcs.	2,20
Lower NONIUS Hanger CD60	pcs.	2,20
NONIUS clamp (2 pcs/package)	pcs.	4,40
Cross connection bracket CD60	pcs.	2,50
Mechanical fixing (e.g. METAL DOWEL)*	pcs.	3,40
Self-tapping screw AF 212x25[1]	pcs.	6,00
Self-tapping screw AF 212x45[2]	pcs.	12,00
Self-drilling screw AP 421x13	pcs.	12,00
Joint tape**	ml	2,00
NIDA Profesional jointing compound	kg	0,30
Mono-adhesive insulating tape	ml	0,60
Mineral wool (optional)***	m²	1,00

In case of ceilings, the plasterboards should be installed perpendicular, not along the structure.

[1] The first layer of boards - from metal structure
[2] The second layer of boards - from metal structure

*Mechanical fixing shall be selected by the specialized designer of the works, depending on the type of support (concrete, reinforced concrete, screeds, metal structures, wood...), maximum effective forces calculated in accordance with the law in force, the load bearing capacities of the selected fixing elements, as well as the mounting possibilities.Use only metal connectors for fire resistant systems
It is recommended that the mechanical fixing, as well as the load supported to be 1/3 of the load declared by the manufacturer of the fixing.

**For fire or humidity resistant systems, fiber glsas felting should be used;

***Mineral wool shall be used in the ceiling only for acoustical considerations and shall be considered as additional weight to the ceiling.

For other fixing interaxis, please refer to the TECHNICAL CATALOGUE Edition 2015

INSTALLATION

BOARDS STAGGERING

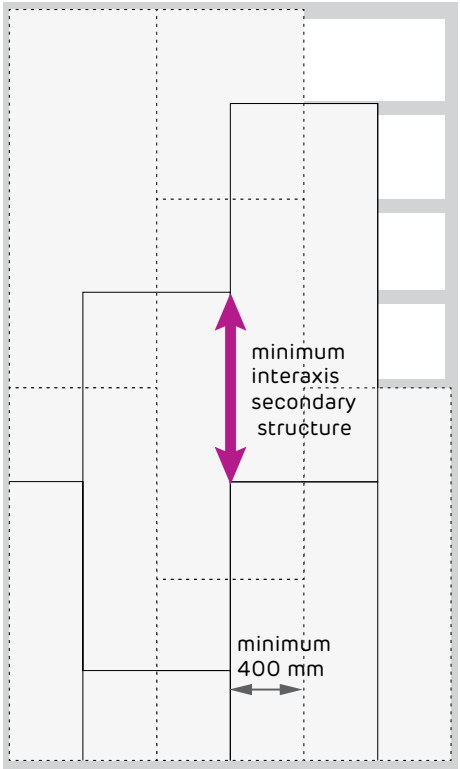

* Horizontal and vertical joints should be staggered to avoid overlapping in case of multiple linings

JOINT WITH MASSIVE WALL CROSS SECTION

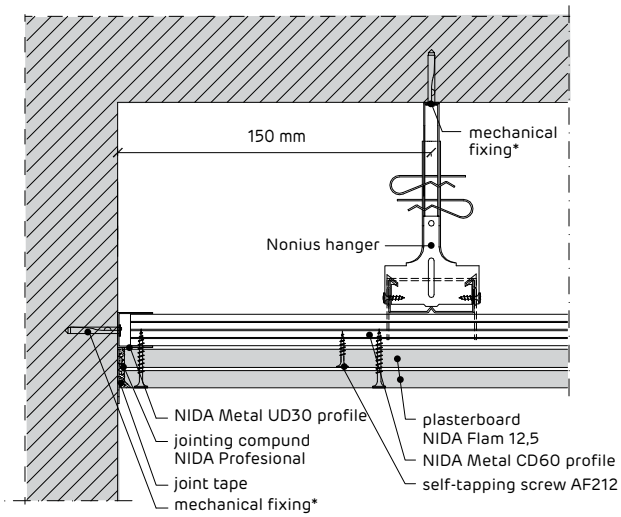

LONGITUDINAL SECTION, SLIDING JOINT

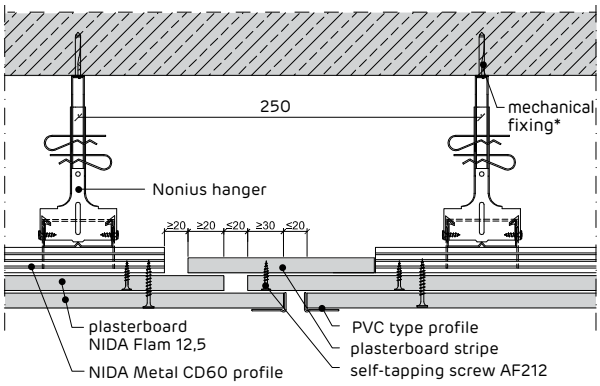

CROSS SECTION

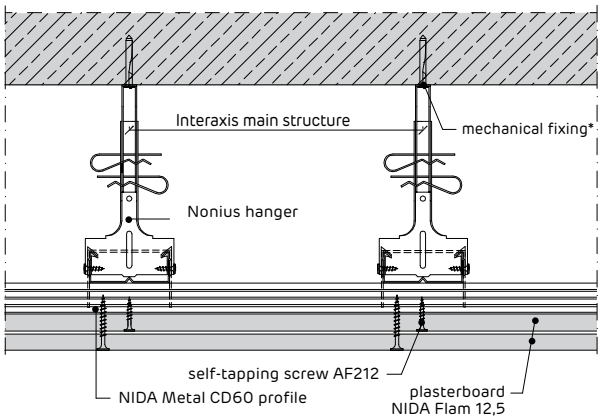

JOINT WITH PLASTERBOARD PARTITION; CROSS SECTION

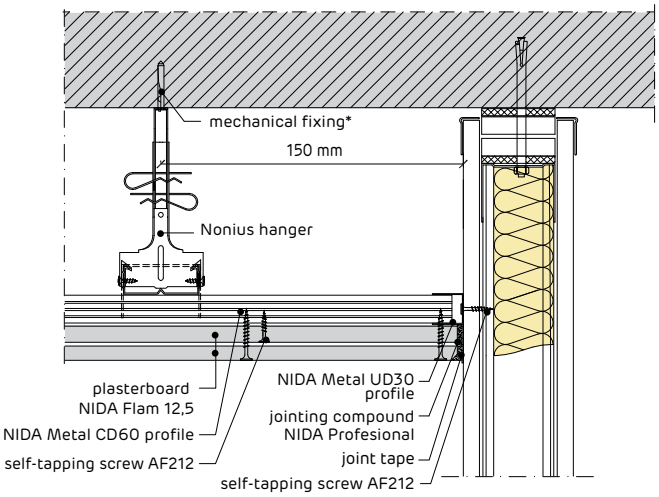

LONGITUDINAL SECTION. JOINT WITH MASSIVE WALL

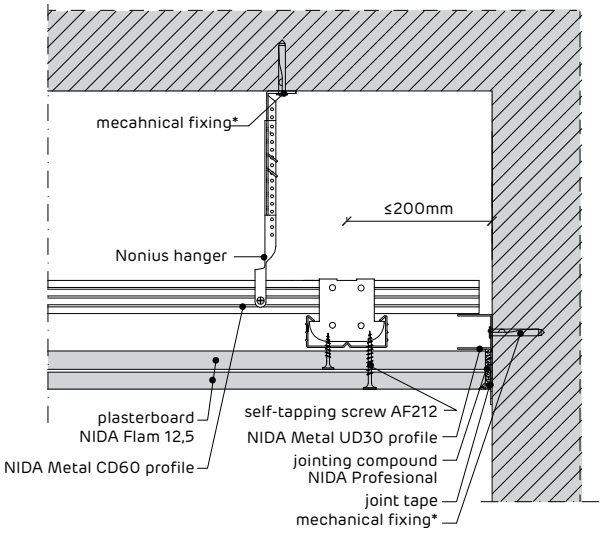

Ceiling EI60 plenum 7-13 cm

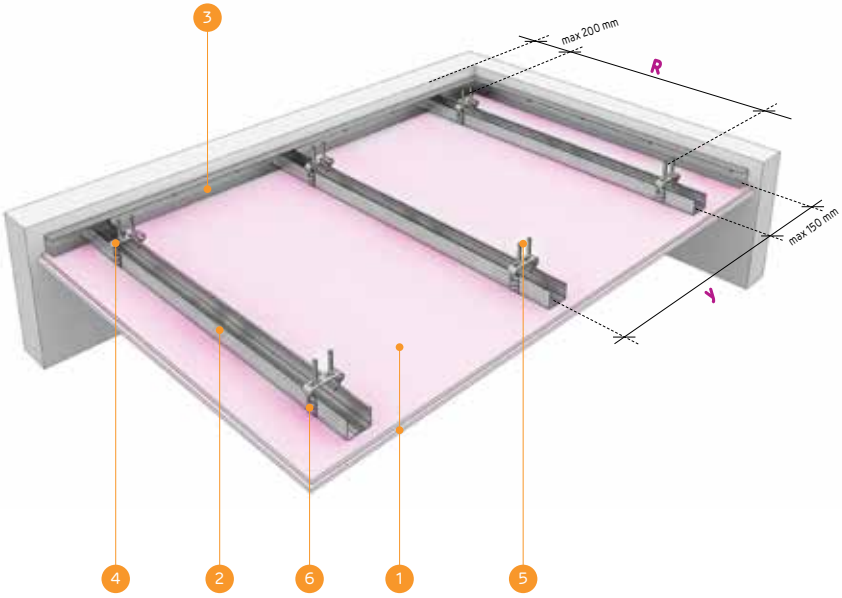

1. NIDA Flam 15 plasterboard
2. NIDA Metal CD60 profile
3. NIDA Metal UD30 profile
4. NIDA System adjustable bracket
5. Mechanical fixing (e.g. METAL DOWEL)
6. Self-drilling screw AP 421

SYSTEM PRESENTATION

- Metal structure: NIDA Metal CD60 / UD30 thickness 0,60mm
- Type and number of plasterboards: 2xNIDA Flam 15
- Mineral wool: optional, only for acoustical considerations
- Weight: ≈35 kg/m²

PERFORMANCES

NIDA Metal Profile	Loading class [daN/m²]	Number of NIDA plasterboards	Interaxis	
			Adjustable bracket R [cm]	Metal profile y [cm]
CD 60	15	2xNIDA Flam 15	100	40

Average quantities for 1 m² of 3m wide and 5 m long system

The loss coefficient is not included in the table. This shall be determined by the constructor depending on the specificity of the project.

PRODUCTS	UM	QUANTITIES DOUBLE LINING SYSTEM
NIDA Flam 15 plasterboard	m²	2,00
NIDA Metal CD60 profile	ml	2,70
NIDA Metal UD30 profile	ml	0,60
Connector for CD60	pcs.	0,90
NIDA System adjustable bracket	pcs.	2,70
Mechanical fixing (e.g. METAL DOWEL)*	pcs.	3,90
Self-tapping screw AF 212x35(1)	pcs.	6,00
Self-tapping screw AF 212x55(2)	pcs.	12,00
Self-drilling screw AP 421x13	pcs.	12,00
Joint tape**	ml	2,00
NIDA Profesional jointing compound	kg	0,30
Mono-adhesive insulating tape	ml	0,60
Mineral wool (optional)***	m²	1,00

In case of ceilings, the plasterboards should be installed perpendicular, not along the structure.

(1) The first layer of boards - from metal structure
(2) The second layer of boards - from metal structure

*Mechanical fixing shall be selected by the specialized designer of the works, depending on the type of support (concrete, reinforced concrete, screeds, metal structures, wood...), maximum effective forces calculated in accordance with the law in force, the load bearing capacities of the selected fixing elements, as well as the mounting possibilities.Use only metal connectors for fire resistant systems
It is recommended that the mechanical fixing, as well as the load supported to be 1/3 of the load declared by the manufacturer of the fixing.

**For fire or humidity resistant systems, fiber glsas felting should be used;

***Mineral wool se va dispune în cadrul Ceilingului only for acoustical considerations și va fi considerată ca Weight suplimentară adusă Ceilingului.

For other fixing interaxis, please refer to the TECHNICAL CATALOGUE Edition 2015

INSTALLATION

BOARDS STAGGERING

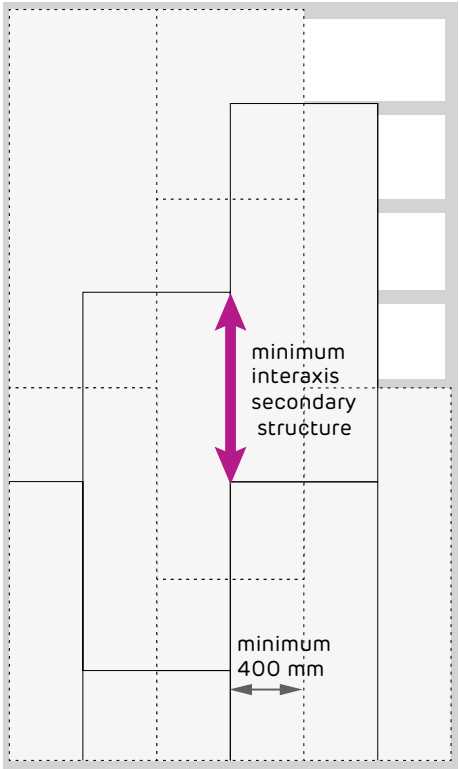

* Horizontal and vertical joints should be staggered to avoid overlapping in case of multiple linings

JOINT WITH MASSIVE WALL CROSS SECTION

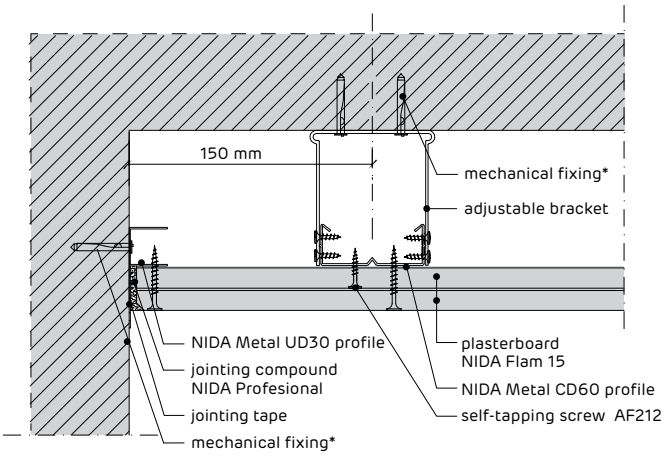

LONGITUDINAL SECTION, SLIDING JOINT

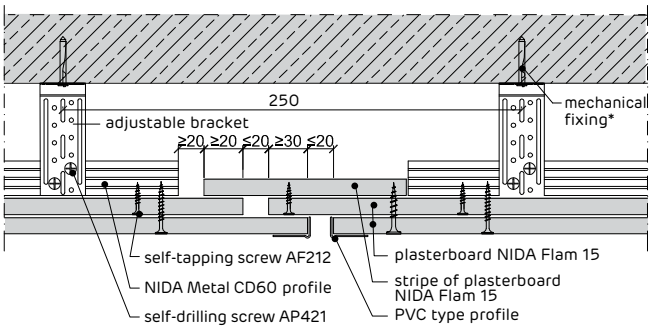

CROSS SECTION

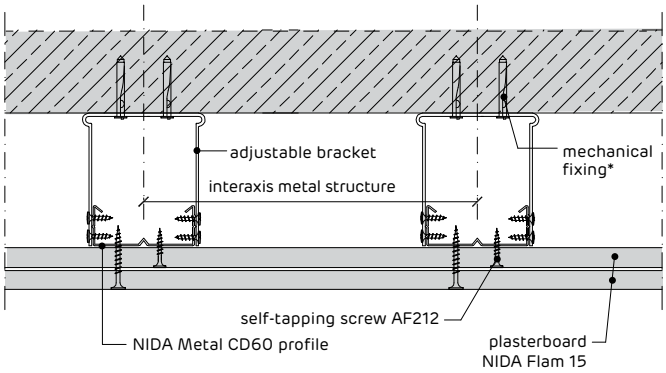

JOINT WITH PLASTERBOARD PARTITION; CROSS SECTION

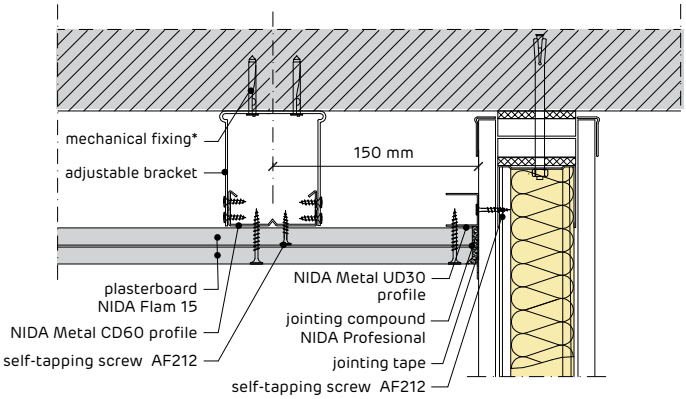

LONGITUDINAL SECTION. JOINT WITH MASSIVE WALL

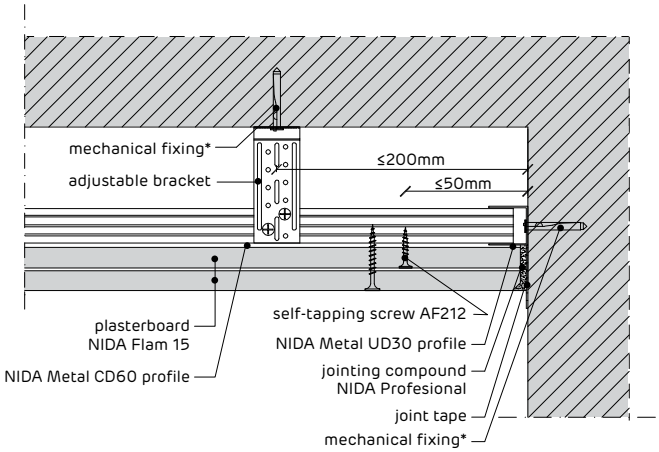

Ceiling EI 60 plenum >20 cm

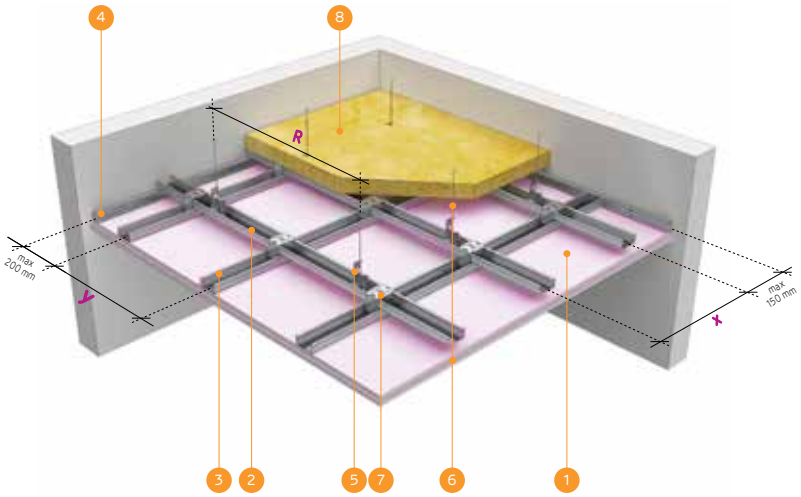

1. NIDA Flam 15 plasterboard
2. NIDA Metal CD60 main profile
3. NIDA Metal CD60 secondary profile
4. NIDA Metal UD30 profile
5. Hanger CD60
6. Steel rod
7. Cross connection bracket CD60
8. Mineral wool (optional)

SYSTEM PRESENTATION

- Metal structure: NIDA Metal CD60 / UD30 thickness 0,60mm
- Type and number of plasterboards: 2xNIDA Flam 15
- Mineral wool: optional, only for acoustical considerations
- Weight: ≈35 kg/m²

PERFORMANCES

SYSTEM TYPE	NIDA Metal Profile	Loading class [daN/m²]	Number of NIDA plasterboards	Joint type		Interaxis		
				Simple	Double	Hanger CD60 R [cm]	Main metal profile x [cm]	Secondary metal profile y [cm]
1	CD 60	15	2xNIDA Flam 15	-	x	50	100	40
2				-	x	100	45	40
3				-	x	120	30	40
4				x	x	90	50	40
5				x	x	100	40	40

Average quantities for 1 m² of 3m wide and 5 m long system

The loss coefficient is not included in the table. This shall be determined by the constructor depending on the specificity of the project.

PRODUCTS	UM	QUANTITIES DOUBLE LINING SYSTEM
NIDA Flam 15 plasterboard	m²	2,00
NIDA Metal CD60 profile	ml	4,10
NIDA Metal UD30 profile	ml	0,60
Connector for CD60	pcs.	0,80
Suspension Hanger CD60 CD60	pcs.	2,80
Steel rod	pcs.	2,80
Cross connection bracket CD60	pcs.	2,50
Mechanical fixing (e.g. METAL DOWEL)*	pcs.	3,40
Self-tapping screw AF 212x25[1]	pcs.	6,00
Self-tapping screw AF 212x45[2]	pcs.	12,00
Self-drilling screw AP 421x13	pcs.	12,00
Joint tape**	ml	2,00
NIDA Profesional jointing compound	kg	0,30
Mono-adhesive insulating tape	ml	0,60
Mineral wool (optional)***	m²	1,00

In case of ceilings, the plasterboards should be installed perpendicular, not along the structure.

[1] The first layer of boards - from metal structure
[2] The second layer of boards - from metal structure

*Mechanical fixing shall be selected by the specialized designer of the works, depending on the type of support (concrete, reinforced concrete, screeds, metal structures, wood...), maximum effective forces calculated in accordance with the law in force, the load bearing capacities of the selected fixing elements, as well as the mounting possibilities.Use only metal connectors for fire resistant systems
It is recommended that the mechanical fixing, as well as the load supported to be 1/3 of the load declared by the manufacturer of the fixing.

**For fire or humidity resistant systems, fiber glsas felting should be used;

***Mineral wool shall be used in the ceiling only for acoustical considerations and shall be considered as additional weight to the ceiling.

For other fixing interaxis, please refer to the TECHNICAL CATALOGUE Edition 2015

INSTALLATION

BOARDS STAGGERING

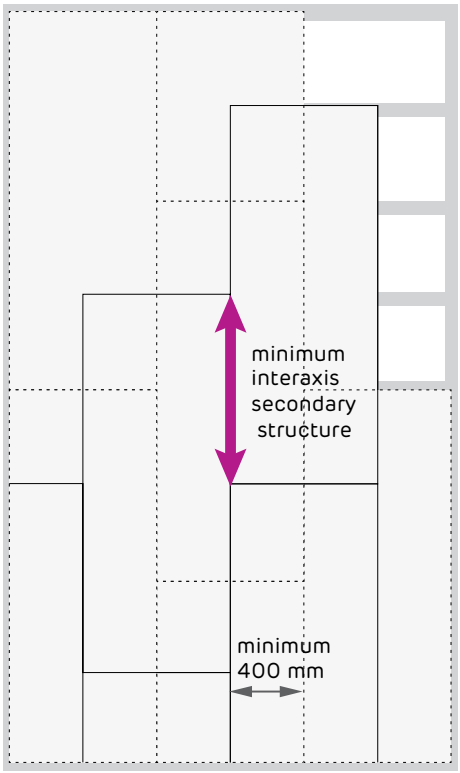

* Horizontal and vertical joints should be staggered to avoid overlapping in case of multiple linings

JOINT WITH MASSIVE WALL CROSS SECTION

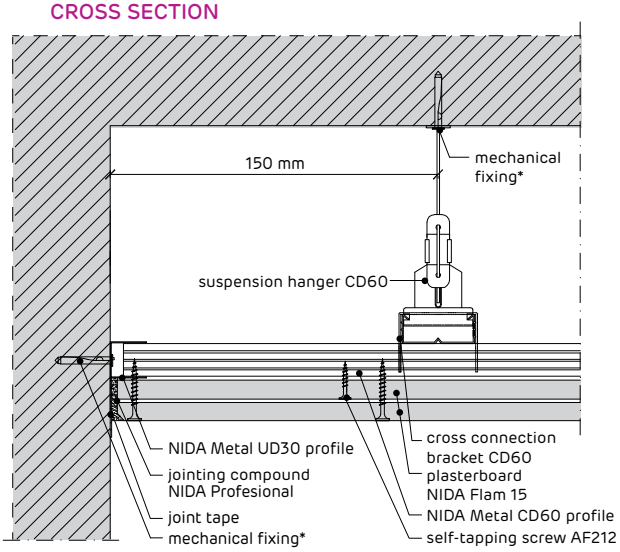

LONGITUDINAL SECTION, SLIDING JOINT

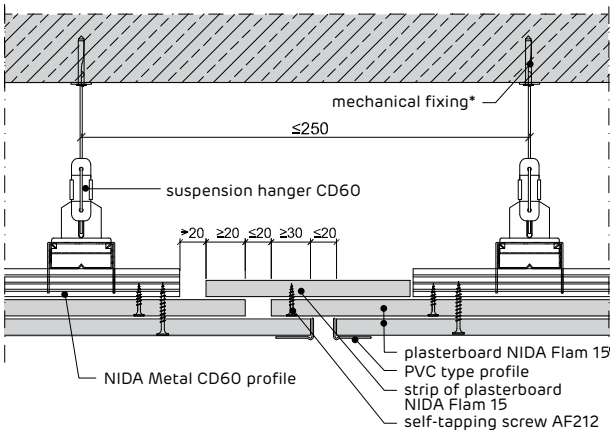

CROSS SECTION

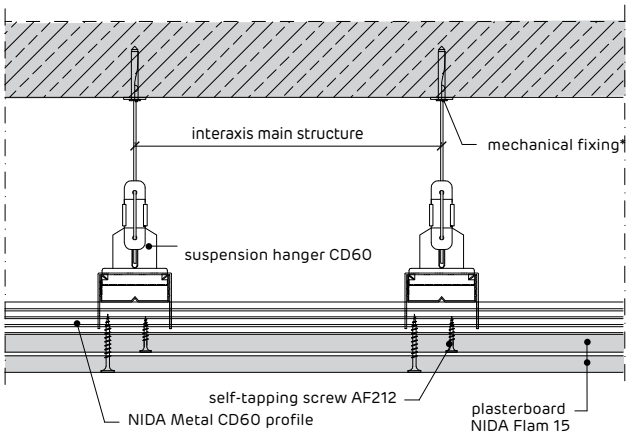

JOINT WITH PLASTERBOARD PARTITION; CROSS SECTION

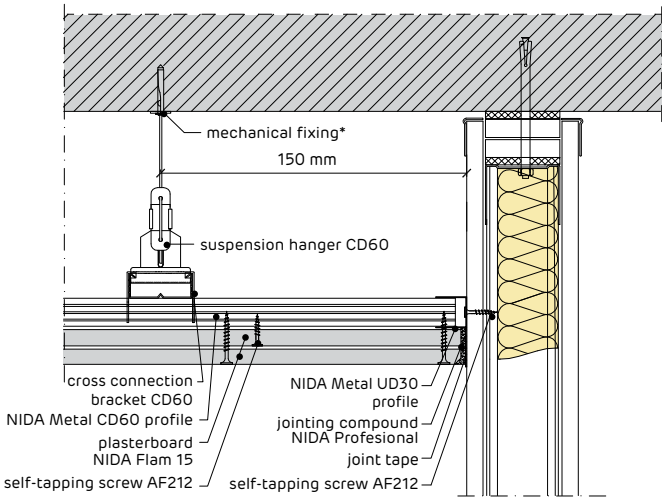

LONGITUDINAL SECTION. JOINT WITH MASSIVE WALL

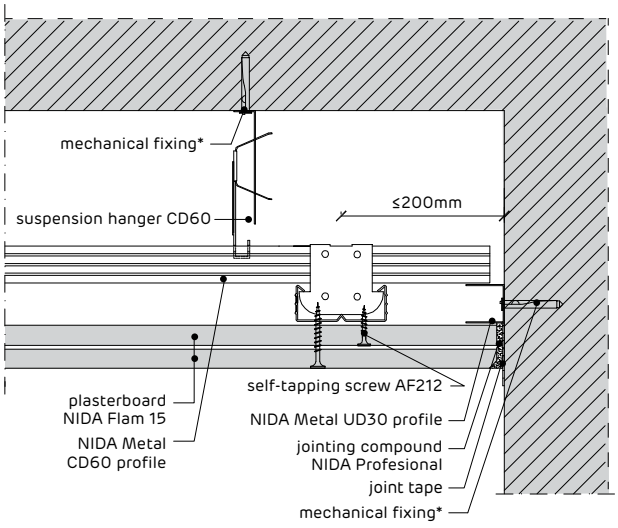

Ceiling EI 60 plenum >25,5 cm

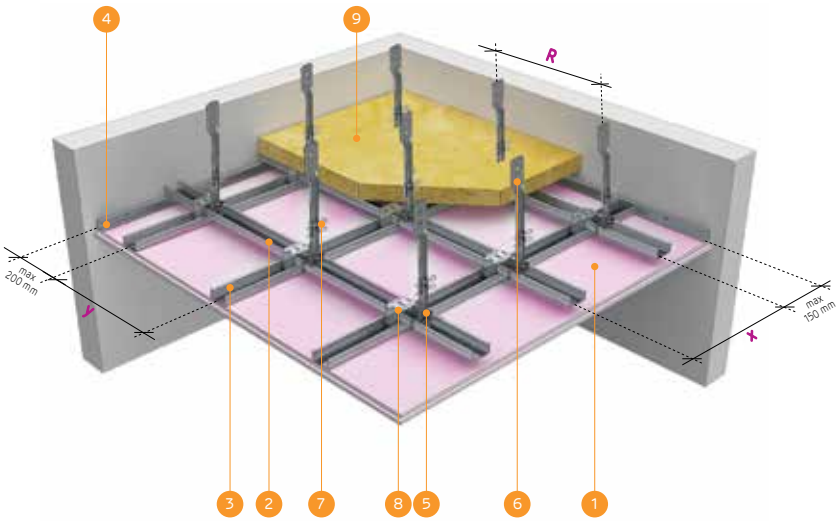

1. NIDA Flam 15 plasterboard
2. NIDA Metal CD60 main profile
3. NIDA Metal CD60 secondary profile
4. NIDA Metal UD30 profile
5. Lower NONIUS Hanger CD60
6. Upper NONIUS Hanger CD60
7. NONIUS clamp
8. Cross connection bracket CD60
9. Mineral wool

SYSTEM PRESENTATION

- Metal structure: NIDA Metal CD60 / UD30, thickness 0,60mm
- Type and number of plasterboards: 2xNIDA Flam 15
- Mineral wool: optional, only for acoustical considerations
- Weight: ≈35 kg/m²

PERFORMANCES

NIDA Metal Profile	Loading class [daN/m²]	Number of NIDA plasterboards	Joint type		Interaxis		
			Simple	Double	NONIUS Hanger CD60 R [cm]	Main metal profile x [cm]	Secondary metal profile y [cm]
CD 60	15	2xNIDA Flam 15	-	x	65	100	40
			-	x	100	40	40
			x	x	90	50	40

Average quantities for 1 m² of 3m wide and 5 m long system

The loss coefficient is not included in the table. This shall be determined by the constructor depending on the specificity of the project.

PRODUCTS	UM	QUANTITIES DOUBLE LINING SYSTEM
NIDA Flam 15 plasterboard	m²	2,00
NIDA Metal CD60 profile	ml	4,10
NIDA Metal UD30 profile	ml	0,60
Connector for CD60	pcs.	0,80
Upper NONIUS Hanger CD60	pcs.	2,20
Lower NONIUS Hanger CD60	pcs.	2,20
NONIUS clamp (2 pcs/package)	pcs.	4,40
Cross connection bracket CD60	pcs.	2,50
Mechanical fixing (e.g. METAL DOWEL)*	pcs.	3,40
Self-tapping screw AF 212x25(1)	pcs.	6,00
Self-tapping screw AF 212x45(2)	pcs.	12,00
Self-drilling screw AP 421x13	pcs.	12,00
Joint tape**	ml	2,00
NIDA Profesional jointing compound	kg	0,30
Mono-adhesive insulating tape	ml	0,60
Mineral wool (optional)***	m²	1,00

In case of ceilings, the plasterboards should be installed perpendicular, not along the structure.

(1) The first layer of boards - from metal structure
(2) The second layer of boards - from metal structure

*Mechanical fixing shall be selected by the specialized designer of the works, depending on the type of support (concrete, reinforced concrete, screeds, metal structures, wood...), maximum effective forces calculated in accordance with the law in force, the load bearing capacities of the selected fixing elements, as well as the mounting possibilities.Use only metal connectors for fire resistant systems
It is recommended that the mechanical fixing, as well as the load supported to be 1/3 of the load declared by the manufacturer of the fixing.

**For fire or humidity resistant systems, fiber glsas felting should be used;

***Mineral wool shall be used in the ceiling only for acoustical considerations and shall be considered as additional weight to the ceiling.

For other fixing interaxis, please refer to the TECHNICAL CATALOGUE Edition 2015

INSTALLATION

BOARDS STAGGERING

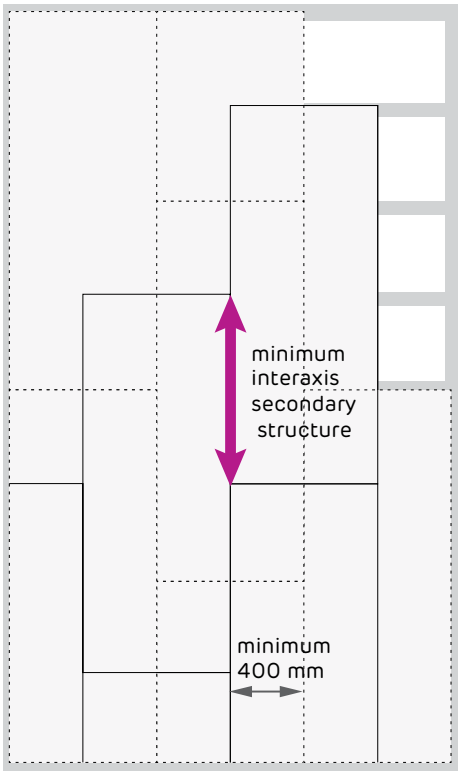

* Horizontal and vertical joints should be staggered to avoid overlapping in case of multiple linings

JOINT WITH MASSIVE WALL CROSS SECTION

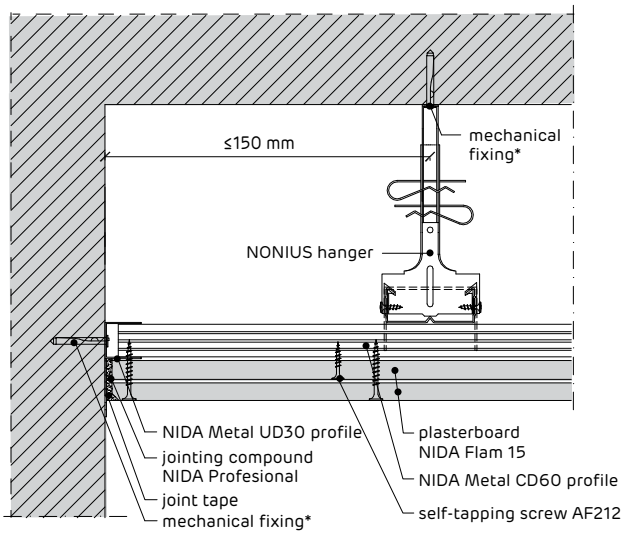

LONGITUDINAL SECTION, SLIDING JOINT

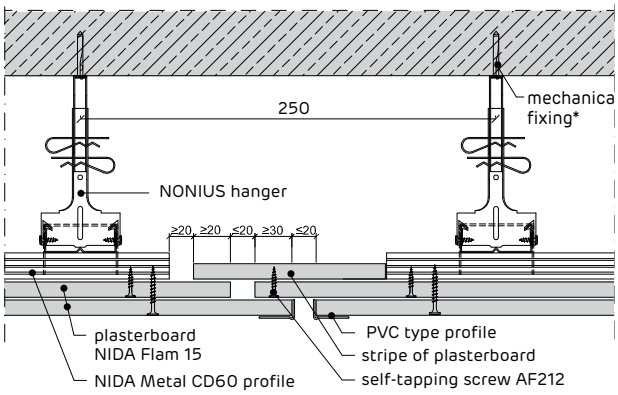

CROSS SECTION

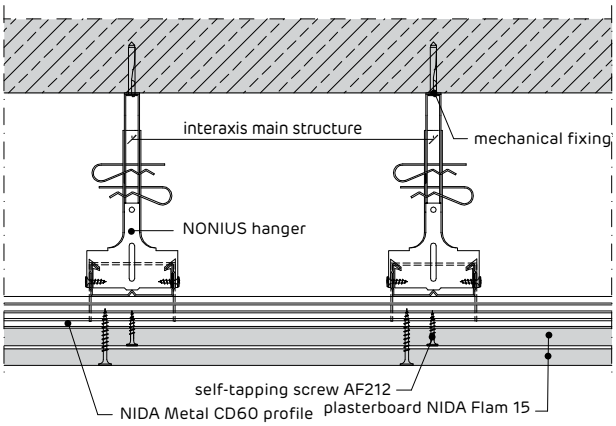

JOINT WITH PLASTERBOARD PARTITION; CROSS SECTION

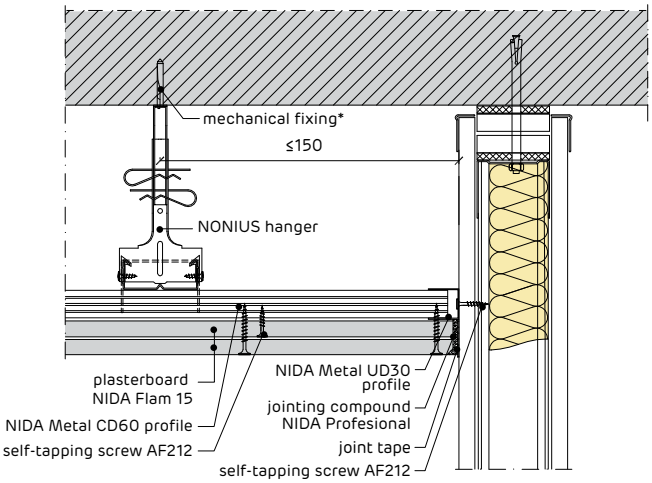

LONGITUDINAL SECTION. JOINT WITH MASSIVE WALL

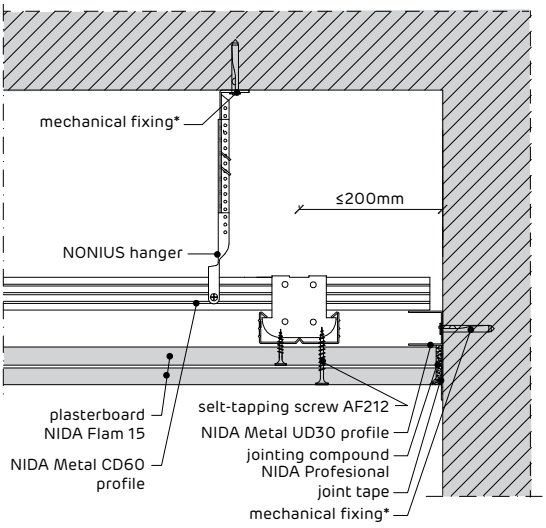

Ceiling EI 90 plenum >27 cm

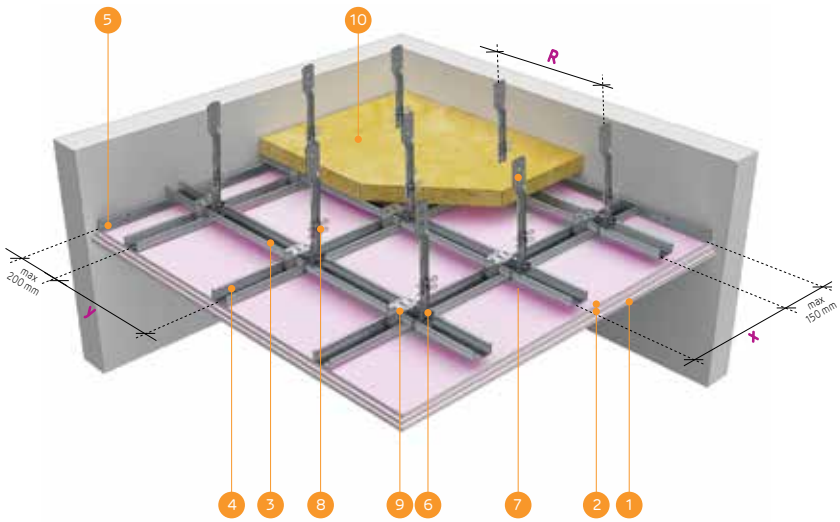

1. NIDA Flam 15 plasterboard
2. NIDA Flam 12,5 plasterboard
3. NIDA Metal CD60 main profile
4. NIDA Metal CD60 secondary profile
5. NIDA Metal UD30 profile
6. Lower NONIUS Hanger CD60
7. Upper NONIUS Hanger CD60
8. NONIUS clamp
9. Cross connection bracket CD60
10. Mineral wool

SYSTEM PRESENTATION

- Metal structure: NIDA Metal CD60 / UD30 thickness 0,60mm
- Type and number of plasterboards: 2xNIDA Flam 12,5 + 1xNIDA Flam 15
- Mineral wool: optional, only for acoustical considerations
- Weight: ≈45 kg/m²

PERFORMANCES

NIDA Metal Profile	Loading class [daN/m²]	Number of NIDA plasterboards	Joint type		Interaxis		
			Simple	Double	NONIUS Hanger CD60 R [cm]	Main metal profile x [cm]	Secondary metal profile y [cm]
CD 60	15	2xNIDA Flam 12,5 + 1xNIDA Flam 15	-	x	65	85	40

Average quantities for 1 m² of 3m wide and 5 m long system

The loss coefficient is not included in the table. This shall be determined by the constructor depending on the specificity of the project.

PRODUCTS	UM	QUANTITIES TRIPLE LINING SYSTEM
NIDA Flam 12,5 plasterboard	m²	2,00
NIDA Flam 15 plasterboard	m²	1,00
NIDA Metal CD60 profile	ml	4,30
NIDA Metal UD30 profile	ml	0,60
Connector for CD60	pcs.	0,90
Upper NONIUS Hanger CD60	pcs.	2,50
Lower NONIUS Hanger CD60	pcs.	2,50
NONIUS clamp (2 pcs/package)	pcs.	5,00
Cross connection bracket CD60	pcs.	3,00
Mechanical fixing (e.g. METAL DOWEL)*	pcs.	3,70
Self-tapping screw AF 212x25(1)	pcs.	6,00
Self-tapping screw AF 212x45(2)	pcs.	6,00
Self-tapping screw AF 212x55(3)	pcs.	12,00
Self-drilling screw AP 421x13	pcs.	16,00
Joint tape**	ml	2,00
NIDA Profesional jointing compound	kg	0,45
Mono-adhesive insulating tape	ml	0,60
Mineral wool (optional)***	m²	1,00

In case of ceilings, the plasterboards should be installed perpendicular, not along the structure.

(1) The first layer of boards - from metal structure
(2) The second layer of boards - from metal structure
(3) The third layer of boards - from metal structure

*Mechanical fixing shall be selected by the specialized designer of the works, depending on the type of support (concrete, reinforced concrete, screeds, metal structures, wood...), maximum effective forces calculated in accordance with the law in force, the load bearing capacities of the selected fixing elements, as well as the mounting possibilities.Use only metal connectors for fire resistant systems
It is recommended that the mechanical fixing, as well as the load supported to be 1/3 of the load declared by the manufacturer of the fixing.

**For fire or humidity resistant systems, fiber glsas felting should be used;

***Mineral wool shall be used in the ceiling only for acoustical considerations and shall be considered as additional weight to the ceiling.

For other fixing interaxis, please refer to the TECHNICAL CATALOGUE Edition 2015

INSTALLATION

BOARDS STAGGERING

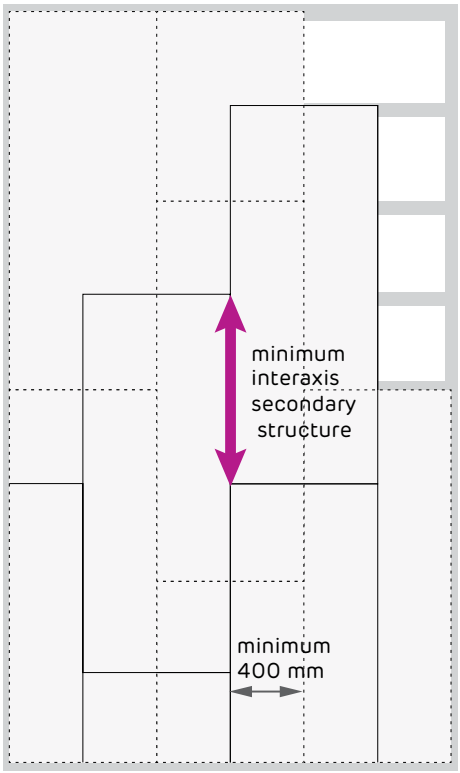

* Horizontal and vertical joints should be staggered to avoid overlapping in case of multiple linings

JOINT WITH MASSIVE WALL CROSS SECTION

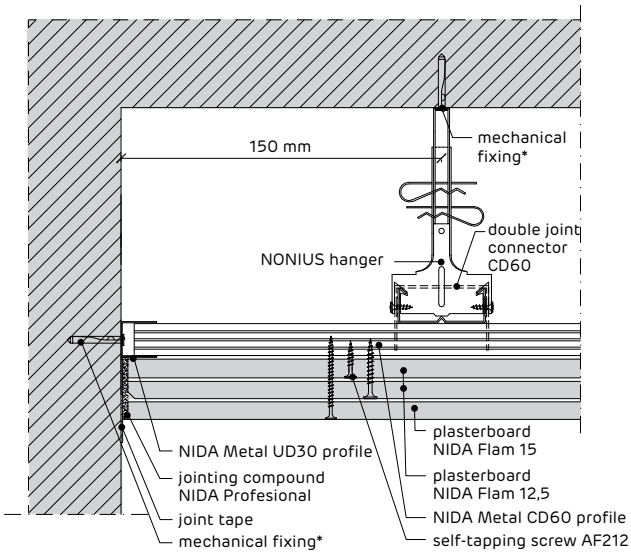

LONGITUDINAL SECTION, SLIDING JOINT

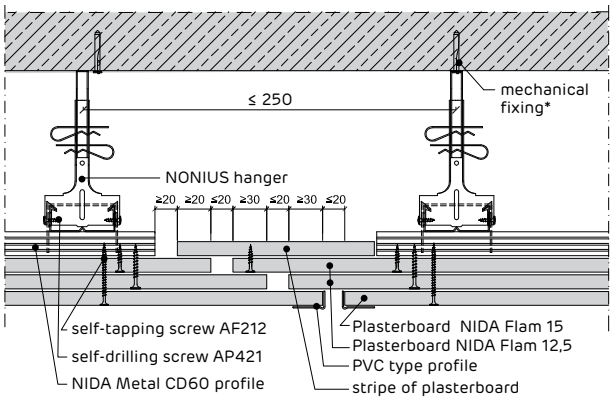

CROSS SECTION

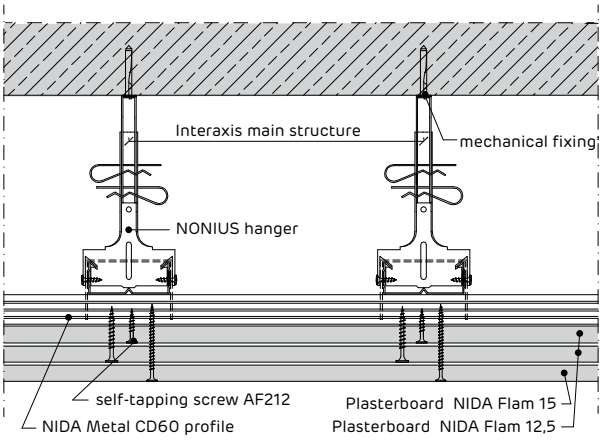

JOINT WITH PLASTERBOARD PARTITION; CROSS SECTION

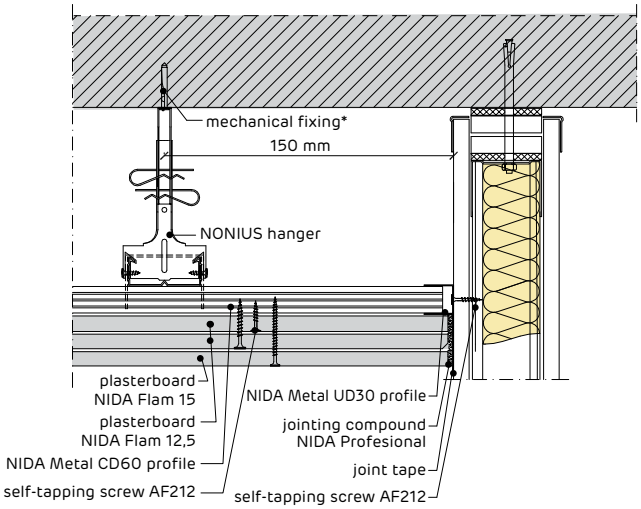

LONGITUDINAL SECTION. JOINT WITH MASSIVE WALL

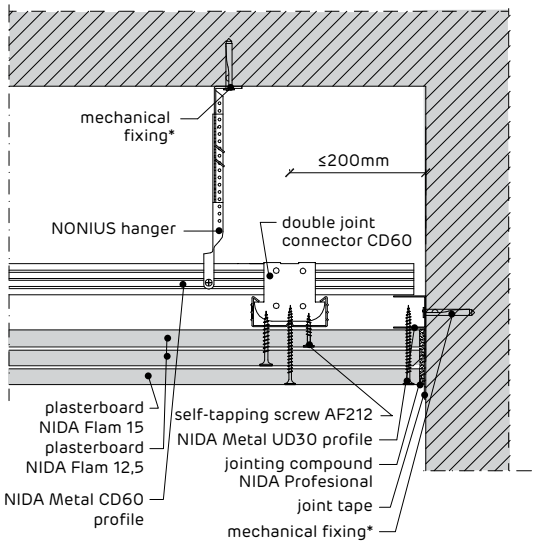

Ceiling EI 120 plenum >29 cm

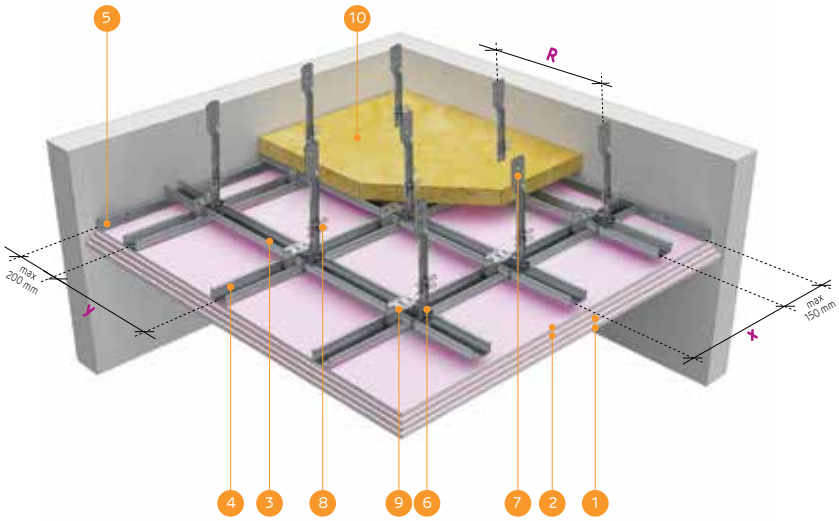

1. NIDA Flam 15 plasterboard
2. NIDA Flam 12,5 plasterboard
3. NIDA Metal CD60 main profile
4. NIDA Metal CD60 secondary profile
5. NIDA Metal UD30 profile
6. Lower NONIUS Hanger CD60
7. Upper NONIUS Hanger CD60
8. NONIUS clamp
9. Cross connection bracket CD60
10. Mineral wool

SYSTEM PRESENTATION

- Metal structure: NIDA Metal CD60 / UD30 thickness 0,60mm
- Type and number of plasterboards: 2xNIDA Flam 12,5 + 2xNIDA Flam 15
- Mineral wool: optional, only for acoustical considerations
- Weight: ≈60 kg/m²

PERFORMANCES

NIDA Metal Profile	Loading class [daN/m²]	Number of NIDA plasterboards	Joint type		Interaxis		
			Simple	Double	NONIUS Hanger CD60 R [cm]	Main metal profile x [cm]	Secondary metal profile y [cm]
CD 60	15	2xNIDA Flam 12,5 + 2xNIDA Flam 15	-	x	65	65	40

Average quantities for 1 m² of 3m wide and 5 m long system

The loss coefficient is not included in the table. This shall be determined by the constructor depending on the specificity of the project.

PRODUCTS	UM	QUANTITIES Quadruple lining SYSTEM
NIDA Flam 15 plasterboard	m²	2,00
NIDA Flam 12,5 plasterboard	m²	2,00
NIDA Metal CD60 profile	ml	4,70
NIDA Metal UD30 profile	ml	0,60
Connector for CD60	pcs.	1,00
Upper NONIUS Hanger CD60	pcs.	3,10
Lower NONIUS Hanger CD60	pcs.	3,10
NONIUS clamp (2 pcs/package)	pcs.	6,20
Cross connection bracket CD60	pcs.	4,00
Mechanical fixing (e.g. METAL DOWEL)*	pcs.	4,30
Self-tapping screw AF 212x25(1)	pcs.	6,00
Self-tapping screw AF 212x45(2)	pcs.	6,00
Self-tapping screw AF 212x55(3)	pcs.	6,00
Self-tapping screw AF 212x70(4)	pcs.	12,00
Self-drilling screw AP 421x13	pcs.	18,00
Joint tape**	ml	2,00
NIDA Profesional jointing compound	kg	0,60
Mono-adhesive insulating tape	ml	0,60
Mineral wool (optional)***	m²	1,00

In case of ceilings, the plasterboards should be installed perpendicular, not along the structure.

(1) The first layer of boards - from metal structure
(2) The second layer of boards - from metal structure
(3) The third layer of boards from metal structure(4) The fourth layer of boards - from metal structure

*Mechanical fixing shall be selected by the specialized designer of the works, depending on the type of support (concrete, reinforced concrete, screeds, metal structures, wood...), maximum effective forces calculated in accordance with the law in force, the load bearing capacities of the selected fixing elements, as well as the mounting possibilities.Use only metal connectors for fire resistant systems
It is recommended that the mechanical fixing, as well as the load supported to be 1/3 of the load declared by the manufacturer of the fixing.

**For fire or humidity resistant systems, fiber glsas felting should be used;

***Mineral wool shall be used in the ceiling only for acoustical considerations and shall be considered as additional weight to the ceiling.

For other fixing interaxis, please refer to the TECHNICAL CATALOGUE Edition 2015

INSTALLATION

BOARDS STAGGERING

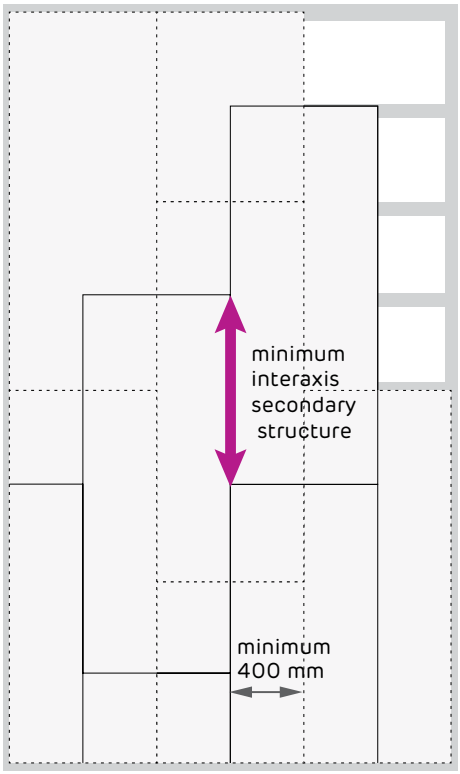

* Horizontal and vertical joints should be staggered to avoid overlapping in case of multiple linings

JOINT WITH MASSIVE WALL CROSS SECTION

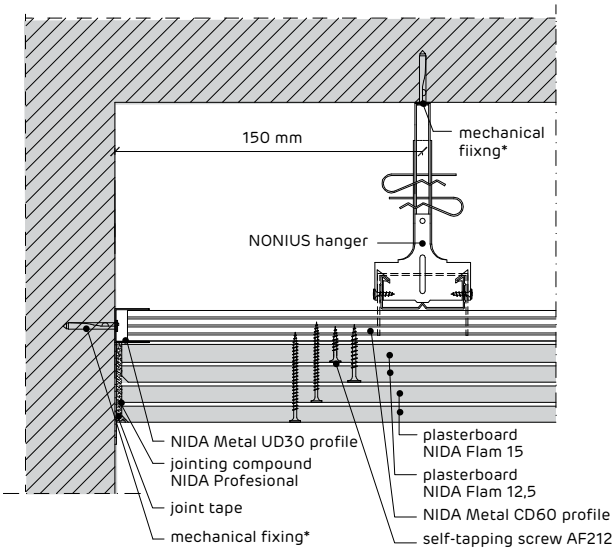

LONGITUDINAL SECTION, SLIDING JOINT

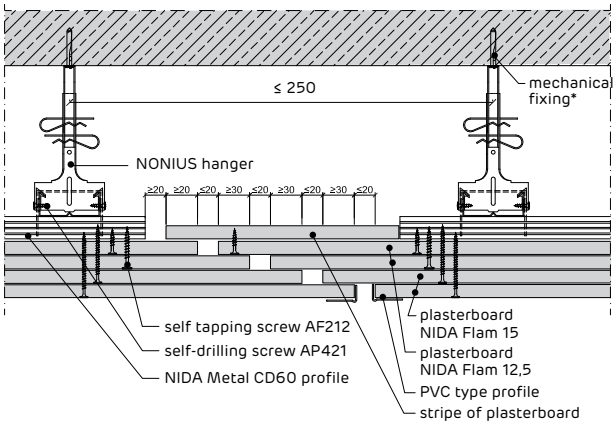

CROSS SECTION

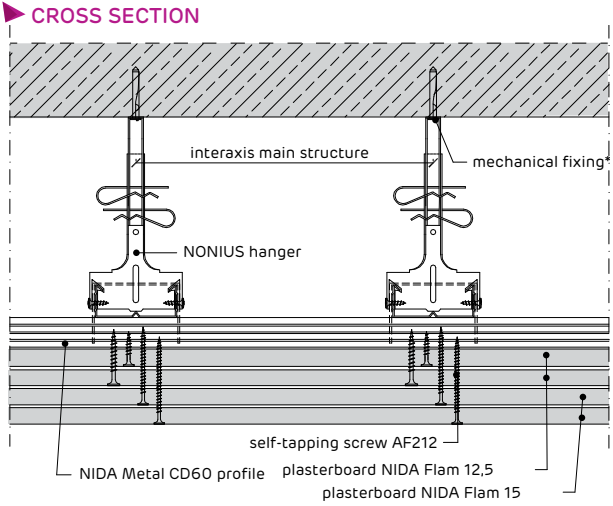

JOINT WITH PLASTERBOARD PARTITION; CROSS SECTION

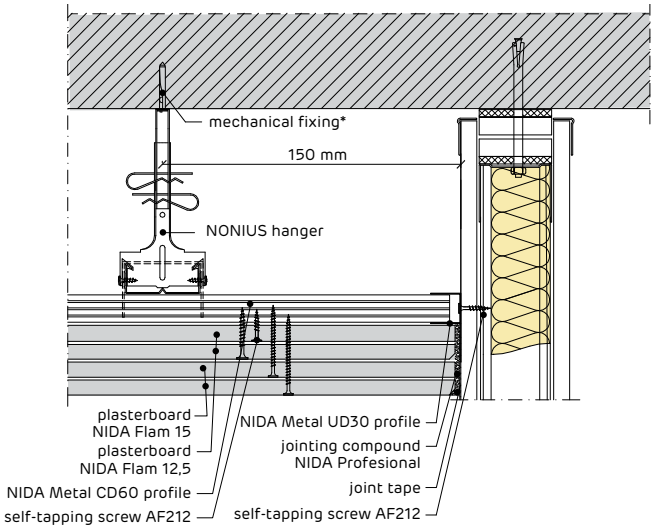

LONGITUDINAL SECTION. JOINT WITH MASSIVE WALL

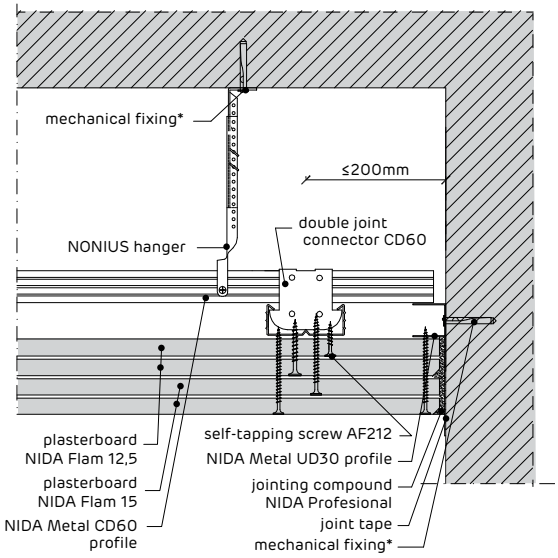

Commercial Team

Cătălin Biță - Bucharest, Ilfov
0720 070 267
catalin.bita@siniat.com

Cristina Subțirică - Dobrogea
0751 012 112
cristina.subtirica@siniat.com

Radu Popescu - Banat
0745 344 315
radu.popescu@siniat.com

Ștefan Fodor - Transilvania
0745 344 312
stefan.fodor@siniat.com

Revelino Popescu - Oltenia
0742 100 792
revelino.popescu@siniat.com

Silviu Constantin - Muntenia
0752 305 313
silviu.constantin@siniat.com

Ciprian Elisei - Moldova
0742 189 913
ciprian.elisei@siniat.com

Technical Team

Ioana Ilie - Bucharest, Ilfov, Oltenia
0755 036 297
ioana.ilie@siniat.com

Vasile Onică - Dobrogea, Muntenia
0751 303 884
vasile.onica@siniat.com

Mihai Baran - Moldova
0745 573 550
mihai.baran@siniat.com

Daniel Ocolișan - Banat, Transilvania
0742 295 182
daniel.ocolisan@siniat.com

Promat

Special solutions for fire protection

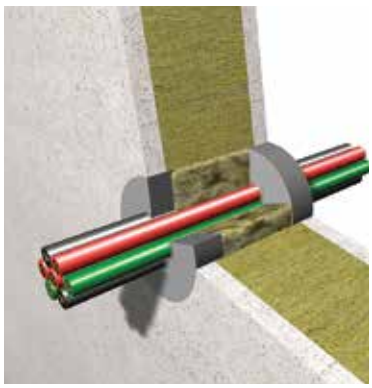

Ppartitions and ceilings fire-resistant pass-through systems for utilities

- Indoor and outdoor
- Chemical environments
- Water- and oil- resistant
- Suitable for equipment in nuclear power plants

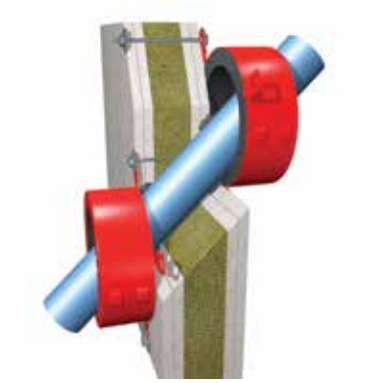

Fire-resistant collars for all types of pipes

- Various systems
- Quick and easy assembly
- U/U, U/C configuration
- Small distances between installations ≥ 0 mm (see EN 1366-3 Fig.E1)

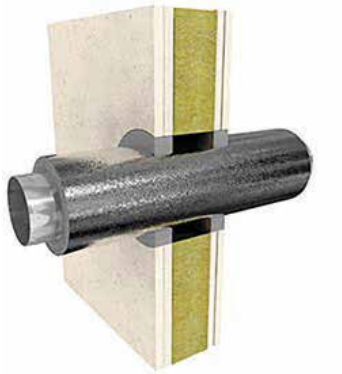

Insulation for various types of pipes

- According to EN 1366-3
- Flammable and non-flammable
- Supported and interrupted, continuous and local (see EN 1366-3 Table 1)

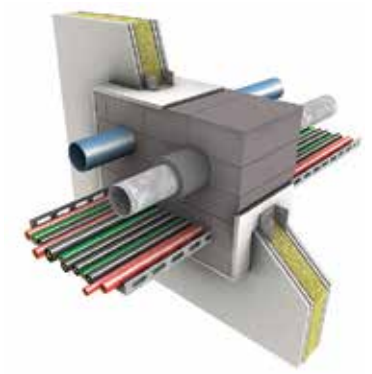

Mixed fire resistant system for cables and pipes protection

- Easy to penetrate
- Penetrations with mastic
- Flexible
- Atypical solutions

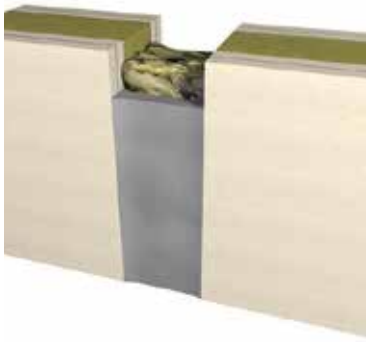

Fire-resistant systems for joints protection in partitions and ceilings

- A wide variety of systems
- Permanent elasticity
- Assembly on one side
- Up to 600mm width

Fire-resistant HVAC ducts

- ducts made of Promat boards
- fire insulation for sheet ducts
- Fire resistance from inside to outside and from outside to inside
- Solutions even for 240 minutes

Smoke exhaust ducts

- Mono- and multi-compartment
- Large cross-sections (vertical and horizontal)
- High operating pressures
- Low weight

Canale rezistente la foc pentru protecția cablurilor

- High functional resistance for electrical installations
- Reliabe solutions for high voltage cables

PROMATECT®-H

- Calcium silicate board
- 50 years of market presence
- High impact resistance, moisture and frost
- Outdoor use (type Y, ETAG 018-4)

PROMATECT®-L

- Low-density calcium silicate board
- Our solution with the lowest wieght
- For new buildings and rennovation projects
- Humidity resistance

PROMASPRAY®-P300

- Easy to apply, ensures effective fire-resistance
- Can be applied by spray
- Based on gypsum and vermicule
- Indoor use

Fire-resistant windows

- PROMAGLAS, PROMAGLAS F1 and SYSTEMGLAS range
- Installation without a frame
- Up to 3.5m high
- Resistance to fire up to EI 120

Promat

Romania
Branch of Reprezentanta firmei Promat d.o.o. Slovenia
No. 98 Vulturilor Street , Etaj 5
030857 Bucharest
Phone +40 31 224 01 00
Fax +40 31 224 01 01
E-mail info.ro@promat-see.com
www.promat-see.com

For other contact details of Promat, visit: www.promat-international.com.

ETEX BUILDING PERFORMANCE S.A.
No. 98 Vulturilor Street, 5th floor
District 3, Bucharest
Phone.: (+4) 031 224 01 00
Fax: (+4) 031 224 01 01
www.siniat.ro